THE DATASHEET OF

DF3-5P-2DSA(01)

The product information in this catalog is for reference only. Please request the Engineering Drawing for the most current and accurate design information.
All non-RoHS products have been discontinued, or will be discontinued soon. Please check the products status on the Hirose website RoHS search at www.hirose-connectors.com, or contact your Hirose sales representative.

2mm Pitch Connector for Discrete Wire Connection(Product approved by UL CSA Standard)

DF3 Series

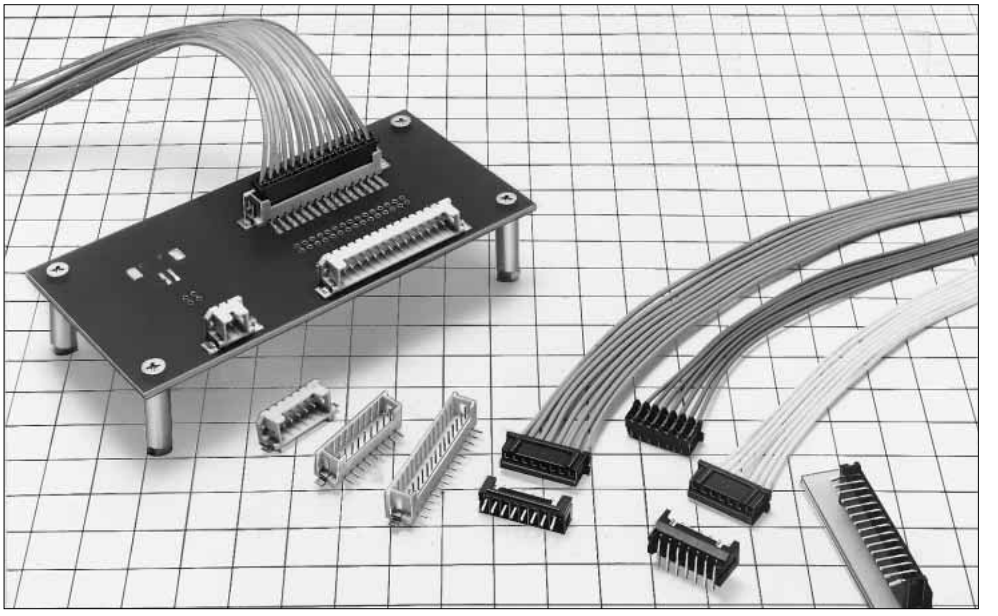

■Features

Correspond to Board Design in Wide Variation

●ID Socket
(1) Low profile design with the mounting height of 6.8mm
(2) Achieves the multi-harness by the full automatic ID machine in combination with the DF11 series ID type.
(DF11 series represents the 2mm pitch single-row product.Please refer to page B220 to B233.)

●Crimp Socket
(1) Low profile design with mounting height 7.5mm.
(2) Provide the contact crimping area with the sufficient space, and secures the stable crimping operation.

●Receptacle
(1) The board can be connected horizontally or vertically in combination with the straight header with the right angle header.
(2) For horizontal connection, the board to board size is the low profile of 6.6mm.
(3) Compatibility with the in-line plug allows the receptacle to set the board side to the receptacle and the cable side to the plug in the board to cable connection.

●Pin Header
(1) The board pre-fixed kink is treated with the post pin.
(2) The style employs a scoop-proof and sturborn box type.
(3) The type corresponding to SMT is avilable, using the heat-proof resin.
This SMT header is equipped with the metal tab to prevent peeling in the solder joint area.

●In-line Plug
(1) The crimping in-line plug consits of two types, one type, which has pursued after space merits, and the other employs the panel lock type, which can be fixed to the panel.
(2) The in-line adapter is available to insert and in-line the ID socket from both sides.

■Applications

Business equipment such as copy machine and printer

■Product Specifications

Rating	Current rating Note 1	Crimping	Wire size		AWG#22 to 24 :3A AWG#26 :2A AWG#28 :1A	Operating Temperature Range Operating Humidity Range	-30℃ to +85℃ Note 2. 40% to 80%
		IDC	Wire size		AWG 26, 28:1A	Storage Temperature Range Storagg Humidity Range	-10℃ to +60℃ Note 3. 40% to 70% Note 3.
	Voltage rating AC100V	Crimping	Press-fit: 250V AC	IDC	Press-connect: 100V AC		

UL-CSA Safety Standard and Approved specification			
Rating	Rated Current	Wire size	AWG 24 to 28: 1A
	Rated Voltage	30V AC	

■UL CSA Safety Standard File No.
UL :E52653
CSA :LR95109
■UL CSA Acquisition Objective Item
①DF3-∗S-2C
②DF3/3A-∗P-2DSA/DS
③DF3/DF3AA-∗EP-2C
④DF3-∗S-2R26/28
⑤DF3-∗P-2H

Item	Specification	Condition	
1. Insulation Resistance	1000M ohms min.	500V DC	
2. Withstanding voltage	No flashover or insulation breakdown.	650V AC/1 minute	
3. Contact Resistance	30m ohms max	100mA	
4. Single Insertor/Extraction Force	MIN0.3N (30gf), MAX4.4N(450gf)	Measure by the square steel pin with 0.5±0.002mm	
5. Vibration	No electrical discontinuity of 1μs or more	Frequency: 10 to 55 Hz, single amplitude of 0.75 mm, 2 hours in each of the 3 directions.	
6. Humidity (Steady state)	Contact resistance: 30m ohms max.Insulation resistance: 500M ohms min.	96 hours at temperature of 40℃ and humidity of 90% to 95%	
7. Temperature Cycle	Contact resistance: 30m ohms max.:Insulation resistance: 1000M ohms min.	(-55℃: 30 minutes 5 to 35℃: 10 minutes 85℃: 30 minutes 5 to 35℃: 10minutes) 5 cycles	
8. Durability (Mating/un-mating)	Contact resistance: 30m ohms max.	Tin plating: 30 cycles Gold plating: 50 cycles	
9. Resistance to Soldering Heat	No deformation of components affecting performance.	Flow: 260℃ for 10 seconds	Manual soldering: 300℃ for 2 seconds
		Reflow: At the recommended temperature profile	Manual soldering: 300℃ for 3 seconds

Note 1: Current rating of header is 3A.
Note 2: Includes temperature rise caused by current flow.
Note 3: The term "storage" refers to products stored for long period of time prior to mounting and use. Operating Temperature Range and Humidity range covers non conducting condition of installed connectors in storage, shipment or during transportation.
Note 4: Information contained in this catalog represents general requirements for this Series. Contact us for the drawings and specifications for a specific part number shown.

■Material

Product	Part	Materia	Finish	Remarks
Crimping Socket	Insulator	Polyamide	Black	UL94V-0
IDC Contact for Socket	Contact	Phosphor bronze	Tin plated or gold plated	————
ID Socket	Insulator	Polyamide	Black	UL94V-0
	Contact	Phosphor bronze	Tin plated or gold plated	————
Receptacle	Insulator	Polyamide	Black	UL94V-0
	Contact	Phosphor bronze	Tin plated or gold plated	————
Pin Header	Insulator	Polyamide	Black	UL94V-0
	Contact	Brass	Tin plated or gold plated	————
SMT Pin Header	Insulator	Polyamide	Beige	UL94V-0
	Contact	Brass	Tin plated or gold plated	————
	Metal tab	Brass	Tin plated	————
In-line Plug	Insulator	Polyamide	Black	UL94V-0
In-line IDC Contact	Contact	Phosphor bronze	Tin plated or gold plated	————
In-line Adapter	Insulator	Polyamide	Black	UL94V-0
	Contact	Brass	Tin plated	————

The product information in this catalog is for reference only. Please request the Engineering Drawing for the most current and accurate design information.
All non-RoHS products have been discontinued, or will be discontinued soon. Please check the products status on the Hirose website RoHS search at www.hirose-connectors.com, or contact your Hirose sales representative.

■Ordering Information

●Connector

DF3 - ＊ S - 2C
❶ ❷ ❸ ❹❺

❶ Series Name : DF3, 3A, 3AA	❺ Connection Form/Contact Style
❷ Number of Contacts : 2~15	C : Crimp socket
❸ Connector Type	R26 : ID socket for AWG26
S : Socket	R28 : ID socket for AWG28
P : Pin Header	DSA : Straight through hole
EP : In-line Plug	DS : Right angle through hole
❹ Contact Pitch : 2mm	V : Straight SMT
	H : Right angle SMT
	A : Adapter

●Contact

DF3 - EP2428PCFA
❶ ❷ ❸ ❹

❶ Contact Type	❸ Contact Type/Packaging Type
Blank : For socket	SCF : Socket contact, Reel
EP : For in-line plug	SC : Socket contact, Bag
❷ Applicable Wire Size	PCF : Plug contact, Reel
22 : AWG#22	PC : Plug contact, Bag
2428 : AWG#24 to#28	❹ Plating Type
	Blank : Tin plated
	A : Gold plated (Plug contact)
	C : Gold plated (Socket contact)

■Application pattern

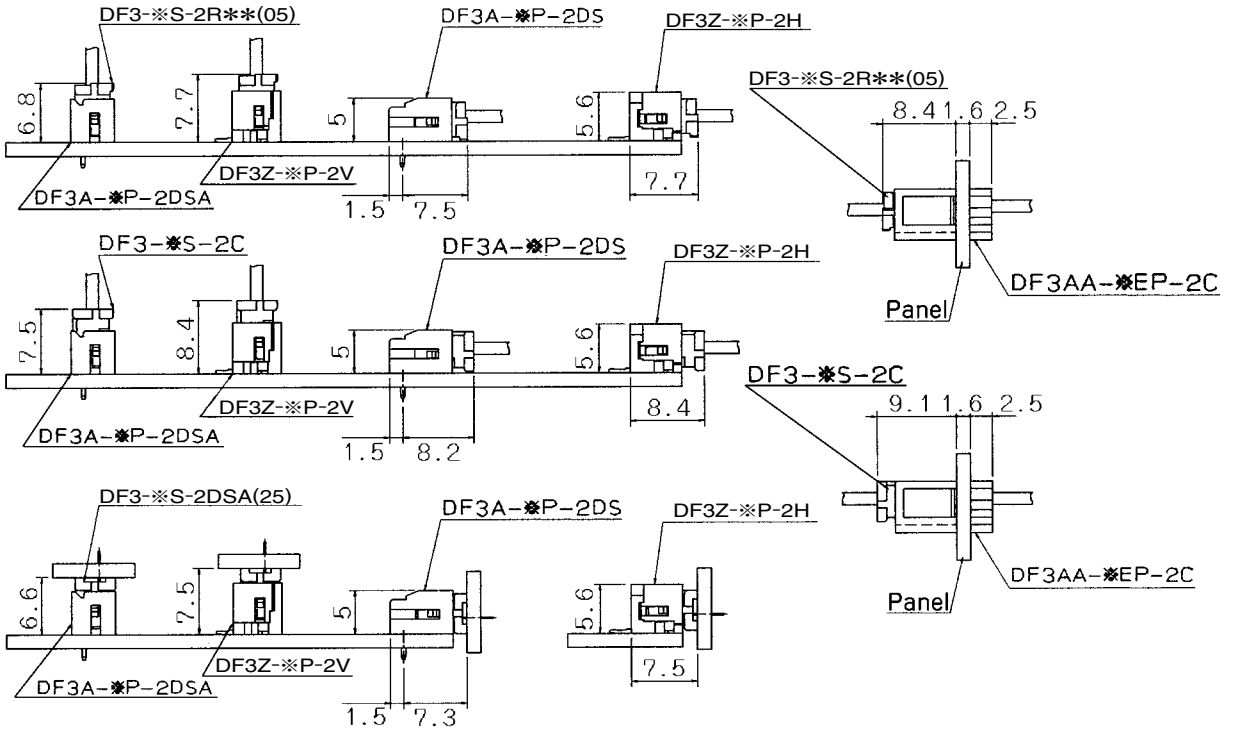

■ID Socket



This picture shows the cable assembled status.

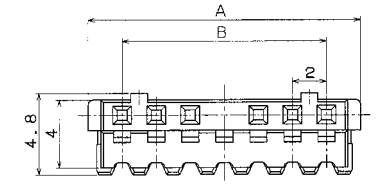

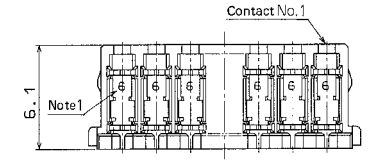



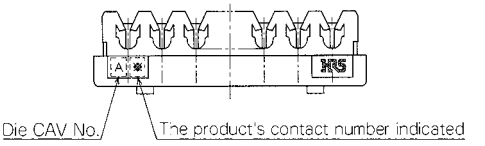

[Specific No.]–＊＊, (＊＊)
(01) : Gold plated, 100 pieces per bag
(05) : Tin plated, 100 pieces per bag
(25) : Tin plated, Tube packaging

Note 1.
Mark to determine the socket name
Mark6: R26, Mark8: R28

●AWG#26 Unit: mm

Part Number	CL No.	Number of Contacts	A	B	Tube packaging Quantity	RoHS
DF3- 2S-2R26(＊＊)	543-0078-7-＊＊	2	6	2	190 pieces	YES
DF3- 3S-2R26(＊＊)	543-0079-0-＊＊	3	8	4	142	
DF3- 4S-2R26(＊＊)	543-0080-9-＊＊	4	10	6	114	
DF3- 5S-2R26(＊＊)	543-0081-1-＊＊	5	12	8	94	
DF3- 6S-2R26(＊＊)	543-0082-4-＊＊	6	14	10	80	
DF3- 7S-2R26(＊＊)	543-0083-7-＊＊	7	16	12	70	
DF3- 8S-2R26(＊＊)	543-0084-0-＊＊	8	18	14	62	
DF3- 9S-2R26(＊＊)	543-0085-2-＊＊	9	20	16	56	
DF3-10S-2R26(＊＊)	543-0086-5-＊＊	10	22	18	52	
DF3-11S-2R26(＊＊)	543-0087-8-＊＊	11	24	20	46	
DF3-12S-2R26(＊＊)	543-0088-0-＊＊	12	26	22	44	
DF3-13S-2R26(＊＊)	543-0089-3-＊＊	13	28	24	40	
DF3-14S-2R26(＊＊)	543-0090-2-＊＊	14	30	26	38	
DF3-15S-2R26(＊＊)	543-0091-5-＊＊	15	32	28	34	

●AWG#28 Unit: mm

Part Number	CL No.	Number of Contacts	A	B	Tube packaging Quantity	RoHS
DF3- 2S-2R28(＊＊)	543-0092-8-＊＊	2	6	2	190 pieces	YES
DF3- 3S-2R28(＊＊)	543-0093-0-＊＊	3	8	4	142	
DF3- 4S-2R28(＊＊)	543-0094-3-＊＊	4	10	6	114	
DF3- 5S-2R28(＊＊)	543-0095-6-＊＊	5	12	8	94	
DF3- 6S-2R28(＊＊)	543-0096-9-＊＊	6	14	10	80	
DF3- 7S-2R28(＊＊)	543-0097-1-＊＊	7	16	12	70	
DF3- 8S-2R28(＊＊)	543-0098-4-＊＊	8	18	14	62	
DF3- 9S-2R28(＊＊)	543-0099-7-＊＊	9	20	16	56	
DF3-10S-2R28(＊＊)	543-0100-4-＊＊	10	22	18	52	
DF3-11S-2R28(＊＊)	543-0101-7-＊＊	11	24	20	46	
DF3-12S-2R28(＊＊)	543-0102-0-＊＊	12	26	22	44	
DF3-13S-2R28(＊＊)	543-0103-2-＊＊	13	28	24	40	
DF3-14S-2R28(＊＊)	543-0104-5-＊＊	14	30	26	38	
DF3-15S-2R28(＊＊)	543-0105-8-＊＊	15	32	28	34	

Note 2.The quantity for delivery of the specific No. (01) and (05) is determined per bag (100pcs.). If needed, please order the productsper bag.
Note 3.If the Full automatic IDC machine to hit the DF11 single core,the (25) tube packaging specification will be applied.
Note 4.Order the tube packaging product, multiplying the tube packaging quantity (pieces).

■Applicable Cable

Part Number	Applicable Cable	Jacket Diameter
DF3-＊S-2R26(＊＊)	UL1061 AWG#26 (7/0.16)	ϕ0.9 to 1mm
DF3-＊S-2R28(＊＊)	UL1061 AWG#28 (7/0.127)	ϕ0.9 to 1mm

■Applicable ID Connection Tool

Type	Part Number	Connection Type	Remarks
DF11 Single Contact Punching Full Automatic ID Machine	AM700/DF11	■ Effective Harness Form ①DF11-Both ended, single ended ②DF11-DF11, Separation ③DF11-DF3, Separation ■ Effective Harness Length 100 to 2,000mm ■ Conduction Inspection Mechanism Installed	Connector is the specification (25). Tube packaging applied
DF3 DF4 Desktop ID Machine	SA701/DF3	DF3 No restriction DF4 No restriction	Desktop machine for small lot

The product information in this catalog is for reference only. Please request the Engineering Drawing for the most current and accurate design information.
All non-RoHS products have been discontinued, or will be discontinued soon. Please check the products status on the Hirose website RoHS search at www.hirose-connectors.com, or contact your Hirose sales representative.

■Crimping Socket

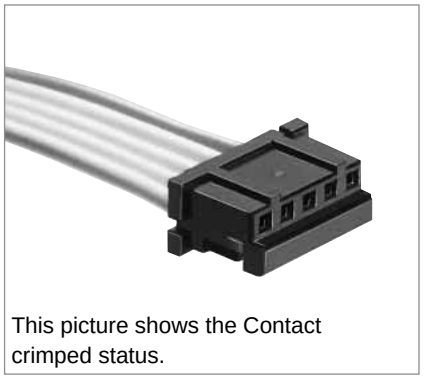

This picture shows the Contact crimped status.

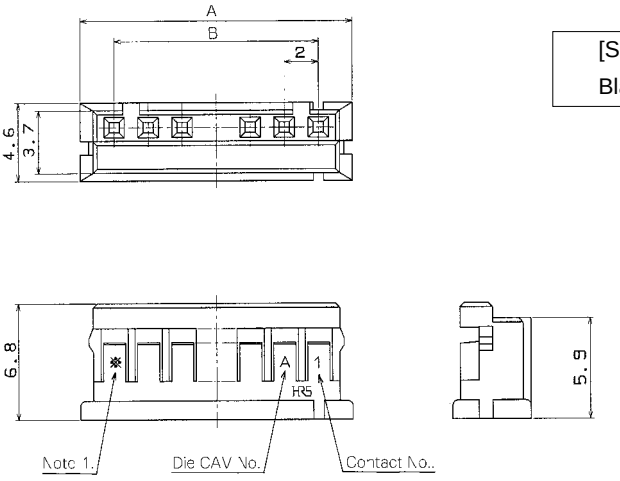

[Specific No.] –＊＊, (＊＊)
Blank: 100 pieces per pack

Unit: mm

Part Number	CL No.	Number of Contacts	A	B	RoHS	Part Number	CL No.	Number of Contacts	A	B	RoHS
DF3-2S-2C(＊＊)	543-0003-8-＊＊	2	6	2		DF3- 9S-2C(＊＊)	543-0010-3-＊＊	9	20	16	
DF3-3S-2C(＊＊)	543-0004-0-＊＊	3	8	4		DF3-10S-2C(＊＊)	543-0011-6-＊＊	10	22	18	
DF3-4S-2C(＊＊)	543-0005-3-＊＊	4	10	6		DF3-11S-2C(＊＊)	543-0012-9-＊＊	11	24	20	
DF3-5S-2C(＊＊)	543-0006-6-＊＊	5	12	8	YES	DF3-12S-2C(＊＊)	543-0013-1-＊＊	12	26	22	YES
DF3-6S-2C(＊＊)	543-0007-9-＊＊	6	14	10		DF3-13S-2C(＊＊)	543-0014-4-＊＊	13	28	24	
DF3-7S-2C(＊＊)	543-0008-1-＊＊	7	16	12		DF3-14S-2C(＊＊)	543-0015-7-＊＊	14	30	26	
DF3-8S-2C(＊＊)	543-0009-4-＊＊	8	18	14		DF3-15S-2C(＊＊)	543-0016-0-＊＊	15	32	28	

Note1: The product's contact number indicated.
Note2: The quantity for delivery of the specification No. "None" is determined per bag (100 pcs.).
If needed, please order the products per bag.
Note3: A quantity of "500 pieces package" and "1000 pieces package" for delivery is dealt with pieces. Order example: 500, 1000, and 1500 pieces...

■Receptacle

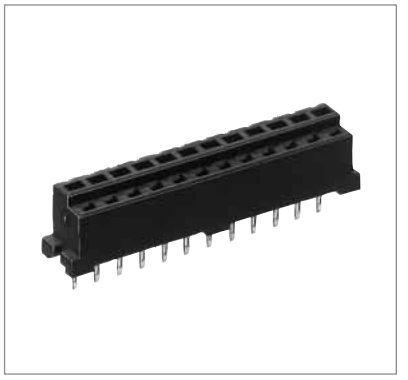

●Board Through-hole Diameter: $\phi 0.8^{+0.1}_{0}$

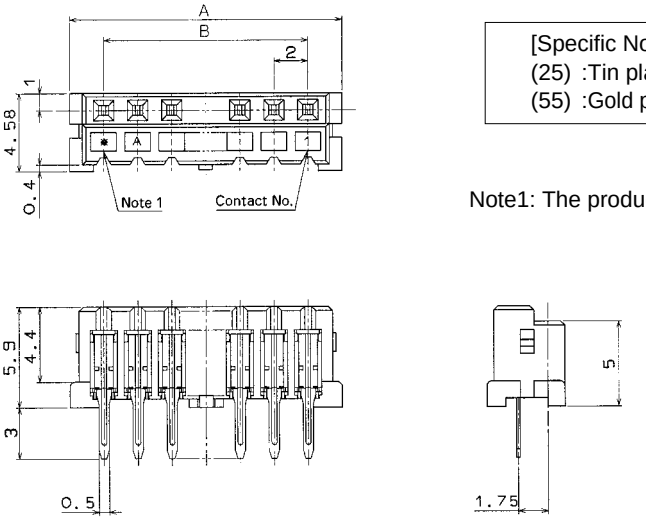

[Specific No.] –＊＊, (＊＊)
(25) :Tin plated, Tube packaging
(55) :Gold plated, Tube packaging

Note1: The product's contact number indicated

Unit: mm

Part Number	CL No.	Number of Contacts	A	B	Tube Package Quantity	RoHS	Part Number	CL No.	Number of Contacts	A	B	Tube Package Quantity	RoHS
DF3-2S-2DSA(＊＊)	543-0048-6-＊＊	2	6	2	80 pieces		DF3- 9S-2DSA(＊＊)	543-0055-1-＊＊	9	20	16	24 pieces	
DF3-3S-2DSA(＊＊)	543-0049-9-＊＊	3	8	4	60		DF3-10S-2DSA(＊＊)	543-0056-4-＊＊	10	22	18	21	
DF3-4S-2DSA(＊＊)	543-0050-8-＊＊	4	10	6	48		DF3-11S-2DSA(＊＊)	543-0057-7-＊＊	11	24	20	20	
DF3-5S-2DSA(＊＊)	543-0051-0-＊＊	5	12	8	40	YES	DF3-12S-2DSA(＊＊)	543-0058-0-＊＊	12	26	22	18	YES
DF3-6S-2DSA(＊＊)	543-0052-3-＊＊	6	14	10	34		DF3-13S-2DSA(＊＊)	543-0059-2-＊＊	13	28	24	17	
DF3-7S-2DSA(＊＊)	543-0053-6-＊＊	7	16	12	30		DF3-14S-2DSA(＊＊)	543-0060-1-＊＊	14	30	26	16	
DF3-8S-2DSA(＊＊)	543-0054-9-＊＊	8	18	14	27		DF3-15S-2DSA(＊＊)	543-0061-4-＊＊	15	32	28	15	

Note2: Please order the tube packaging at the multiplied tube packaging quantity (pieces).

■Straight Pin Header

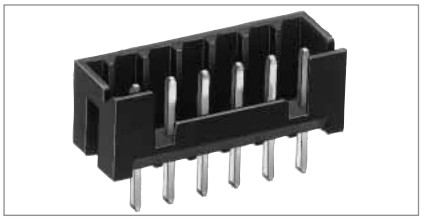

●Board Through-hole Diameter: $\phi 0.8^{+0.1}_{0}$
●Kink Pre-fixed Effective Diameter: $\phi 0.8^{+0.05}_{0}$

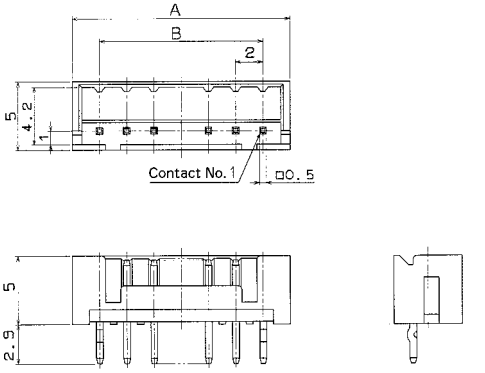

Unit: mm

Tin Plating		Gold Plating		Number of Contacts	A	B	RoHS
Part Number	CL No.	Part Number	CL No.				
DF3A- 2P-2DSA	543-0165-0	DF3- 2P-2DSA(01)	543-0017-2-01	2	6	2	YES
DF3A- 3P-2DSA	543-0166-2	DF3- 3P-2DSA(01)	543-0018-5-01	3	8	4	
DF3A- 4P-2DSA	543-0167-5	DF3- 4P-2DSA(01)	543-0019-8-01	4	10	6	
DF3A- 5P-2DSA	543-0168-8	DF3- 5P-2DSA(01)	543-0020-7-01	5	12	8	
DF3A- 6P-2DSA	543-0169-0	DF3- 6P-2DSA(01)	543-0021-0-01	6	14	10	
DF3A- 7P-2DSA	543-0170-0	DF3- 7P-2DSA(01)	543-0022-2-01	7	16	12	
DF3A- 8P-2DSA	543-0171-2	DF3- 8P-2DSA(01)	543-0023-5-01	8	18	14	
DF3A- 9P-2DSA	543-0172-5	DF3- 9P-2DSA(01)	543-0024-8-01	9	20	16	
DF3A-10P-2DSA	543-0173-8	DF3-10P-2DSA(01)	543-0025-0-01	10	22	18	
DF3A-11P-2DSA	543-0174-0	DF3-11P-2DSA(01)	543-0026-3-01	11	24	20	
DF3A-12P-2DSA	543-0175-3	DF3-12P-2DSA(01)	543-0027-6-01	12	26	22	
DF3A-13P-2DSA	543-0176-6	DF3-13P-2DSA(01)	543-0028-9-01	13	28	24	
DF3A-14P-2DSA	543-0177-9	DF3-14P-2DSA(01)	543-0029-1-01	14	30	26	
DF3A-15P-2DSA	543-0178-1	DF3-15P-2DSA(01)	543-0030-0-01	15	32	28	

Note : The quantity for delivery is determined per bag (100 pcs.). If needed, please order the products per bag.

■Right Angle Pin Header



●Board Through-hole Diameter: $\phi 0.8^{+0.1}_{0}$
●Kink Pre-fixed Effective Diameter: $\phi 0.8^{+0.05}_{0}$

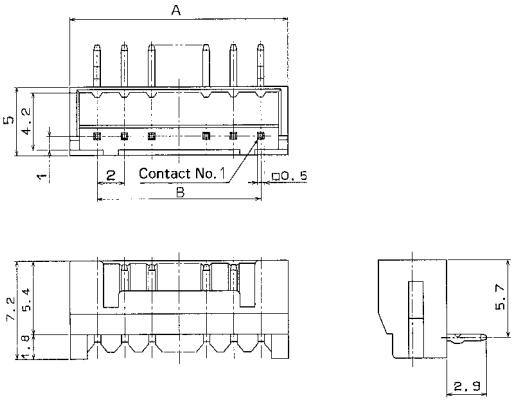

Unit: mm

Tin Plating		Gold Plating		Number of Contacts	A	B	RoHS
Part Number	CL No.	Part Number	CL No.				
DF3A- 2P-2DS	543-0179-4	DF3- 2P-2DS(01)	543-0031-3-01	2	6	2	YES
DF3A- 3P-2DS	543-0180-3	DF3 -3P-2DS(01)	543-0032-6-01	3	8	4	
DF3A- 4P-2DS	543-0181-6	DF3- 4P-2DS(01)	543-0033-9-01	4	10	6	
DF3A- 5P-2DS	543-0182-9	DF3- 5P-2DS(01)	543-0034-1-01	5	12	8	
DF3A- 6P-2DS	543-0183-1	DF3- 6P-2DS(01)	543-0035-4-01	6	14	10	
DF3A- 7P-2DS	543-0184-4	DF3- 7P-2DS(01)	543-0036-7-01	7	16	12	
DF3A- 8P-2DS	543-0185-7	DF3- 8P-2DS(01)	543-0037-0-01	8	18	14	
DF3A- 9P-2DS	543-0186-0	DF3- 9P-2DS(01)	543-0038-2-01	9	20	16	
DF3A-10P-2DS	543-0187-2	DF3-10P-2DS(01)	543-0039-5-01	10	22	18	
DF3A-11P-2DS	543-0188-5	DF3-11P-2DS(01)	543-0040-4-01	11	24	20	
DF3A-12P-2DS	543-0189-8	DF3-12P-2DS(01)	543-0041-7-01	12	26	22	
DF3A-13P-2DS	543-0190-7	DF3-13P-2DS(01)	543-0042-0-01	13	28	24	
DF3A-14P-2DS	543-0191-0	DF3-14P-2DS(01)	543-0043-2-01	14	30	26	
DF3A-15P-2DS	543-0192-2	DF3-15P-2DS(01)	543-0044-5-01	15	32	28	

Note : The quantity for delivery is determined per bag(100 pcs.). If needed, please order the products per bag.

The product information in this catalog is for reference only. Please request the Engineering Drawing for the most current and accurate design information.
All non-RoHS products have been discontinued, or will be discontinued soon. Please check the products status on the Hirose website RoHS search at www.hirose-connectors.com, or contact your Hirose sales representative.

■Straight Pin Header (SMT)

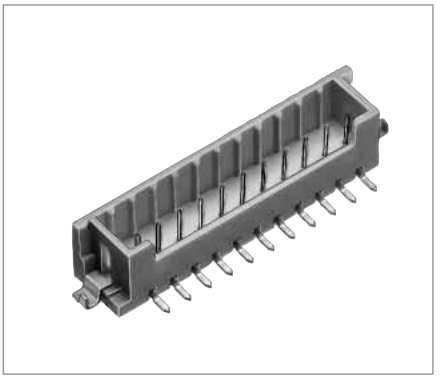

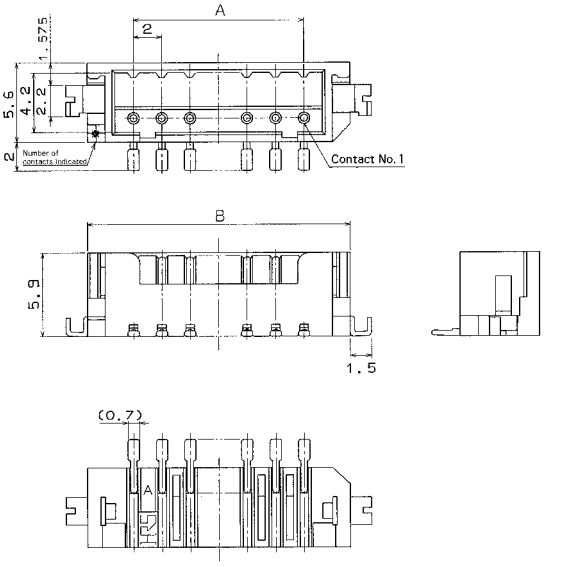

◆PCB mounting pattern

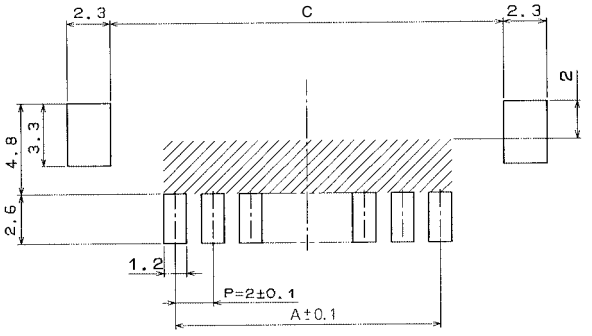

Note : ▨ If a pattern is included in the shaded area and is not treated with resist, it could touch the connector contact.

[Specific No.] –＊＊, (＊＊)
(21) :Tin plated packaging
(51) :Gold plated packaging

Unit: mm

Without Boss		Number of Contacts	A	B	C	RoHS
Part Number	CL No.					
DF3DZ- 2P-2V(＊＊)	0543-1056-0-＊＊	2	2	8.5	8.74	YES
DF3DZ- 3P-2V(＊＊)	0543-1057-2-＊＊	3	4	10.5	10.74	
DF3DZ- 4P-2V(＊＊)	0543-1058-5-＊＊	4	6	12.5	12.74	
DF3DZ- 5P-2V(＊＊)	0543-1059-8-＊＊	5	8	14.5	14.74	
DF3DZ- 6P-2V(＊＊)	0543-1060-7-＊＊	6	10	16.5	16.74	
DF3DZ- 7P-2V(＊＊)	0543-1061-0-＊＊	7	12	18.5	18.74	
DF3DZ- 8P-2V(＊＊)	0543-1062-2-＊＊	8	14	20.5	20.74	
DF3DZ- 9P-2V(＊＊)	0543-1063-5-＊＊	9	16	22.5	22.74	
DF3DZ-10P-2V(＊＊)	0543-1064-8-＊＊	10	18	24.5	24.74	
DF3DZ-11P-2V(＊＊)	0543-1065-0-＊＊	11	20	26.5	26.74	
DF3DZ-12P-2V(＊＊)	0543-1066-3-＊＊	12	22	28.5	28.74	
DF3DZ-13P-2V(＊＊)	0543-1067-6-＊＊	13	24	30.5	30.74	
DF3DZ-14P-2V(＊＊)	0543-1068-9-＊＊	14	26	32.5	32.74	
DF3DZ-15P-2V(＊＊)	0543-1069-1-＊＊	15	28	34.5	34.74	

Note1: Please order the emboss packaging product by the reel number. (1 reel : 1000 pcs.)
Note2: Embossed packaging products have the reel wrapped in polyethylene and include a desiccant.
Note3: Small blisters of the molding compounds in small areas will not affect from,fit or function.

■Right Angle Pin Header (SMT)

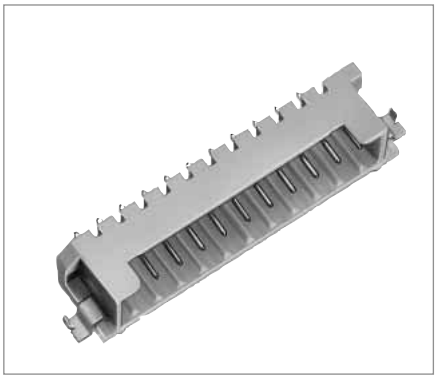

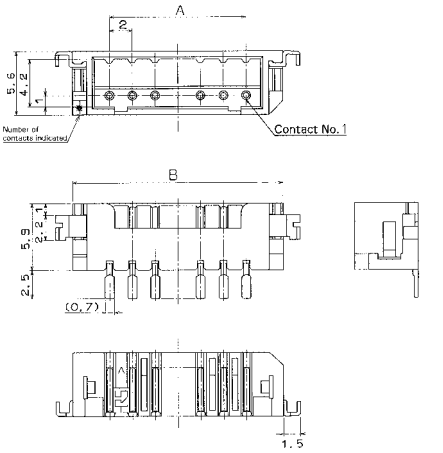

◆PCB mounting pattern

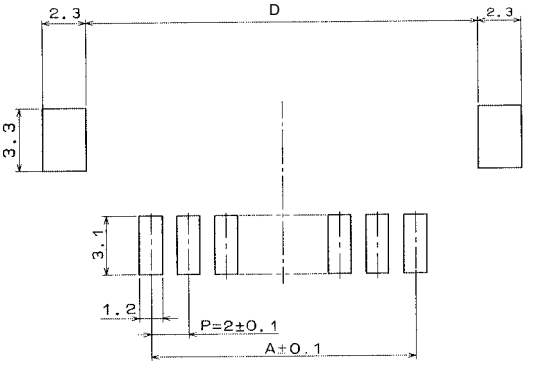

[Specific No.] –＊＊, (＊＊)
(21) :Tin plated embossed packaging (Note the number of contacts for marchandization.)
(51) :Gold plated embossded packaging

Unit: mm

Without Boss		Number of Contacts	A	B	C	RoHS
Part Number	CL No.					
DF3DZ- 2P-2H(＊＊)	0543-1070-0-＊＊	2	2	8.5	8.74	YES
DF3DZ- 3P-2H(＊＊)	0543-1071-3-＊＊	3	4	10.5	10.74	
DF3DZ- 4P-2H(＊＊)	0543-1072-6-＊＊	4	6	12.5	12.74	
DF3DZ- 5P-2H(＊＊)	0543-1073-9-＊＊	5	8	14.5	14.74	
DF3DZ- 6P-2H(＊＊)	0543-1074-1-＊＊	6	10	16.5	16.74	
DF3DZ- 7P-2H(＊＊)	0543-1075-4-＊＊	7	12	18.5	18.74	
DF3DZ- 8P-2H(＊＊)	0543-1076-7-＊＊	8	14	20.5	20.74	
DF3DZ- 9P-2H(＊＊)	0543-1077-0-＊＊	9	16	22.5	22.74	
DF3DZ-10P-2H(＊＊)	0543-1078-2-＊＊	10	18	24.5	24.74	
DF3DZ-11P-2H(＊＊)	0543-1079-5-＊＊	11	20	26.5	26.74	
DF3DZ-12P-2H(＊＊)	0543-1080-4-＊＊	12	22	28.5	28.74	
DF3DZ-13P-2H(＊＊)	0543-1081-7-＊＊	13	24	30.5	30.74	
DF3DZ-14P-2H(＊＊)	0543-1082-0-＊＊	14	26	32.5	32.74	
DF3DZ-15P-2H(＊＊)	0543-1083-2-＊＊	15	28	34.5	34.74	

Note1: Please order the emboss packaging product by the reel number. (1 reel : 1000 pcs.)
Note2: Embossed packaging products have the reel wrapped in polyethylene and include a desiccant.
Note3: Small blisters of the molding compounds in small areas will not affect from,fit or function.

The product information in this catalog is for reference only. Please request the Engineering Drawing for the most current and accurate design information.
All non-RoHS products have been discontinued, or will be discontinued soon. Please check the products status on the Hirose website RoHS search at www.hirose-connectors.com, or contact your Hirose sales representative.

■In-line Plug

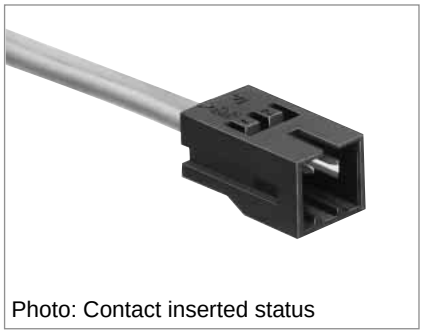
Photo: Contact inserted status

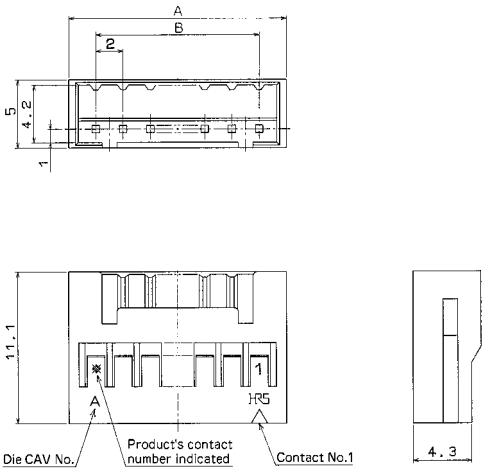

Unit: mm

Part Number	CL No.	Number of Contacts	A	B	RoHS
DF3- 2EP-2C	543-0064-2	2	6	2	YES
DF3- 3EP-2C	543-0065-5	3	8	4	
DF3- 4EP-2C	543-0066-8	4	10	6	
DF3- 5EP-2C	543-0067-0	5	12	8	
DF3- 6EP-2C	543-0068-3	6	14	10	
DF3- 7EP-2C	543-0069-6	7	16	12	
DF3- 8EP-2C	543-0070-5	8	18	14	

Part Number	CL No.	Number of Contacts	A	B	RoHS
DF3- 9EP-2C	543-0071-8	9	20	16	YES
DF3-10EP-2C	543-0072-0	10	22	18	
DF3-11EP-2C	543-0073-3	11	24	20	
DF3-12EP-2C	543-0074-6	12	26	22	
DF3-13EP-2C	543-0075-9	13	28	24	
DF3-14EP-2C	543-0076-1	14	30	26	
DF3-15EP-2C	543-0077-4	15	32	28	

Note : The specific No."None" item is delivered per bag (100 pcs.). Please order products per bag unit.

■In-line Plug with Panel Lock

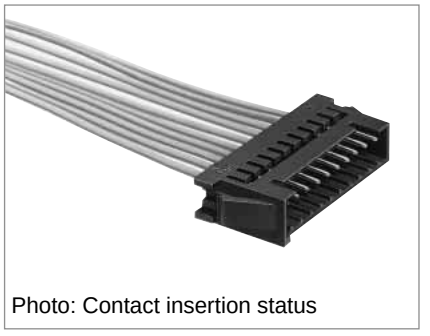
Photo: Contact insertion status

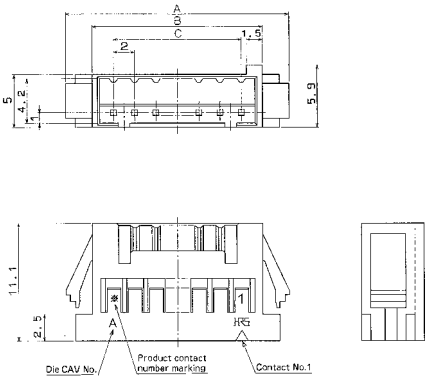

Unit: mm

Part Number	CL No.	Number of Contacts	A	B	C	D	E	RoHS
DF3AA- 2EP-2C	543-0151-5	2	11	6	2	9.4	6.3	YES
DF3AA- 3EP-2C	543-0152-8	3	13	8	4	11.4	8.3	
DF3AA- 4EP-2C	543-0153-0	4	15	10	6	13.4	10.3	
DF3AA- 5EP-2C	543-0154-3	5	17	12	8	15.4	12.3	
DF3AA- 6EP-2C	543-0155-6	6	19	14	10	17.4	14.3	
DF3AA- 7EP-2C	543-0156-9	7	21	16	12	19.4	16.3	
DF3AA- 8EP-2C	543-0157-1	8	23	18	14	21.4	18.3	
DF3AA- 9EP-2C	543-0158-4	9	25	20	16	23.4	20.3	
DF3AA-10EP-2C	543-0159-7	10	27	22	18	25.4	22.3	
DF3AA-11EP-2C	543-0160-6	11	29	24	20	27.4	24.3	
DF3AA-12EP-2C	543-0161-9	12	31	26	22	29.4	26.3	
DF3AA-13EP-2C	543-0162-1	13	33	28	24	31.4	28.3	
DF3AA-14EP-2C	543-0163-4	14	35	30	26	33.4	30.3	
DF3AA-15EP-2C	543-0164-7	15	37	32	28	35.4	32.3	

Note : Delivered per bag (100 pcs.). Please order products per bag unit.

◆Panel Cutouts

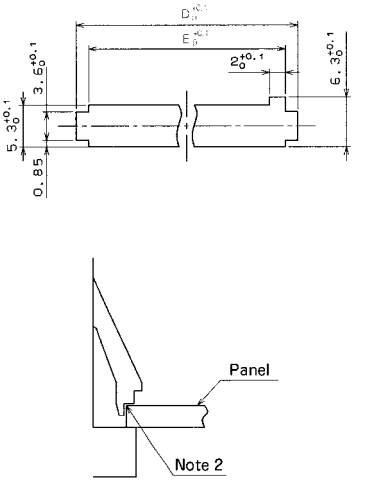

Note1: Applicable panel thickness is 1.6 to 1.0mm. (However, a slight backlash is considered for the thickness other than 1.6 and 1.2mm.)
Note2: Use the non-radius surface at the hooking panel edge.
Note3: Contact No. indicates 1, 4, 8, 12, and 15.

[Specific No.] –＊＊, (＊＊)
Blank : 100 pcs. per bag

The product information in this catalog is for reference only. Please request the Engineering Drawing for the most current and accurate design information.
All non-RoHS products have been discontinued, or will be discontinued soon. Please check the products status on the Hirose website RoHS search at www.hirose-connectors.com, or contact your Hirose sales representative.

■In-line Adapter with Panel Lock



Adapter to in-line by pushing 2 pcs. of socket from both sides
No.1-No.1 connection circuit type

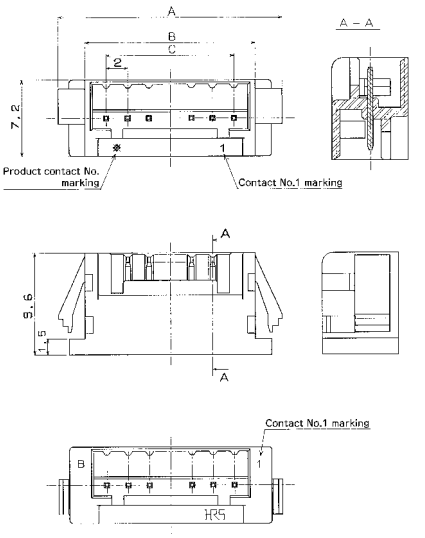

Unit: mm

Part Number	CL No.	Number of Contacts	A	B	C	D	E	RoHS
DF3- 2EP-2A	543-0267-0	2	11	6	2	9.4	6.3	YES
DF3- 3EP-2A	543-0268-2	3	13	8	4	11.4	8.3	
DF3- 4EP-2A	543-0269-5	4	15	10	6	13.4	10.3	
DF3- 5EP-2A	543-0270-4	5	17	12	8	15.4	12.3	
DF3- 6EP-2A	543-0271-7	6	19	14	10	17.4	14.3	
DF3- 7EP-2A	543-0272-0	7	21	16	12	19.4	16.3	
DF3- 8EP-2A	543-0273-2	8	23	18	14	21.4	18.3	
DF3- 9EP-2A	543-0274-5	9	25	20	16	23.4	20.3	
DF3-10EP-2A	543-0275-8	10	27	22	18	25.4	22.3	
DF3-11EP-2A	543-0276-0	11	29	24	20	27.4	24.3	
DF3-12EP-2A	543-0277-3	12	31	26	22	29.4	26.3	
DF3-13EP-2A	543-0278-6	13	33	28	24	31.4	28.3	
DF3-14EP-2A	543-0279-9	14	35	30	26	33.4	30.3	
DF3-15EP-2A	543-0280-8	15	37	32	28	35.4	32.3	

Note : Delivered per bag (100 pcs.). Please order products per bag unit.

◆Panel Cutouts

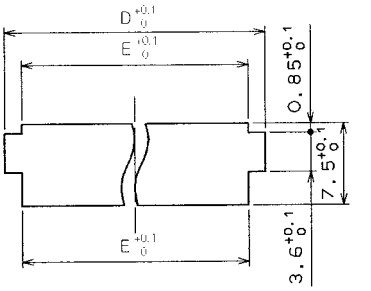

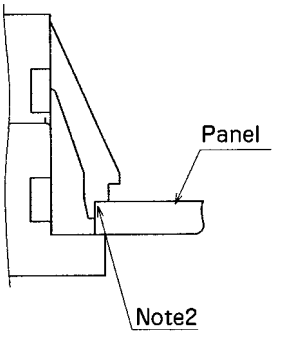

Note1: Applicable panel thickness is 1.6 to 1.0mm.(However,backlash will occur except for 1.6, 1.2mm thickness.)
Note2: Please use the non-radius surface at the hooking panel edge.

The product information in this catalog is for reference only. Please request the Engineering Drawing for the most current and accurate design information.
All non-RoHS products have been discontinued, or will be discontinued soon. Please check the products status on the Hirose website RoHS search at www.hirose-connectors.com, or contact your Hirose sales representative.

■Crimping Contact for Socket

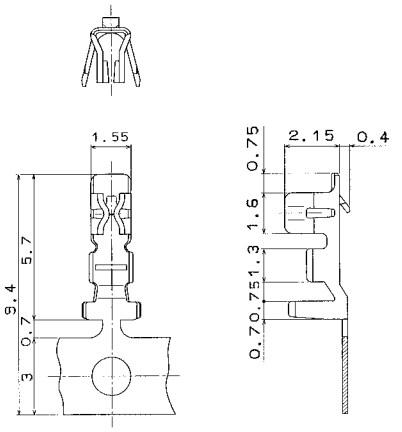

Part Number	CL No.	Type	Quantity	Finish	RoHS
DF3-22SCF	543-0235-3	Reel contact	10000 pcs. per reel	Tin plated	YES
DF3-22SC	543-0236-6	Bulk contact	100 pcs. per pack		
DF3-22SCFC	543-0861-0	Reel contact	10000 pcs. per reel	Gold plated	
DF3-22SCC	543-0862-3	Bulk contact	100 pcs. per pack		
DF3-2428SCF	543-0001-2	Reel contact	10000 pcs. per reel	Tin plated	
DF3-2428SC	543-0002-5	Bulk contact	100 pcs. per pack		
DF3-2428SCFC	543-0046-0	Reel contact	10000 pcs. per reel	Gold plated	
DF3-2428SCC	543-0047-3	Bulk contact	100 pcs. per pack		

●Applicable Wire (Tin Plating Annealed Copper Wire)

Conductor Size (Wire Configuration)	Jacket Diameter
AWG#22 (17pcs./0.16mm)	ϕ1.2 to ϕ1.45mm
AWG#24 (11pcs./0.16mm)	ϕ0.75 to ϕ1.45mm
AWG#26 (7pcs./0.16mm)	
AWG#28 (7pcs./0.127mm)	

●Recommended Wire

UL1061, UL1007 (Note 2.)

●Strip Length

1.8 to 2.3mm

Note1: If other wires are used instead of the applicable cable, please contact HRS company.
Note2: DF3-22SCF is applicable to UL1061.

■Crimping Contact for In-line Plug

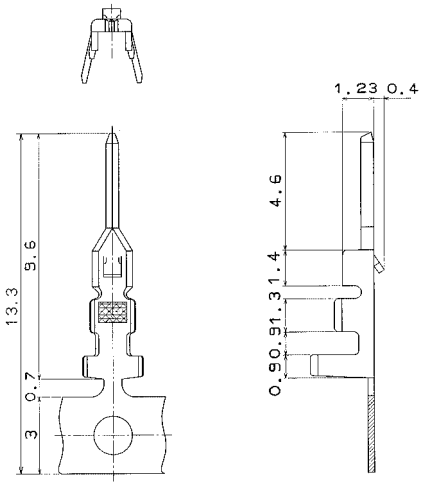

Part Number	CL No.	Type	Quantity	Finish	RoHS
DF3-EP2428PCF	543-0062-7	Reel contact	10000 pcs. per reel	Tin plated	YES
DF3-EP2428PC	543-0063-0	Bulk contact	100 pcs. per pack		
DF3-EP2428PCFA	543-0149-3	Reel contact	10000 pcs. per reel	Gold plated	
DF3-EP2428PCA	543-0150-2	Bulk contact	100 pcs. per pack		

●Applicable Wire (Tin Plating Annealed Copper Wire)

Conductor Size (Wire Configuration)	Jacket Diameter
AWG#24 (11pcs./0.16mm)	ϕ0.75 to ϕ1.45mm
AWG#26 (7pcs./0.16mm)	
AWG#28 (7pcs./0.127mm)	

●Recommended Wire

UL1061, UL1007

●Strip Length

1.9 to 2.5mm

Note1: If other wires are used instead of the applicable cable, please contact HRS company.

◆Applicable Crimping Tool

Type	Part Number	CL No.	Applicable Contact
Applicator	AP105-DF3-2428S	901-4503-3	DF3-2428SCF/SCFC
	AP105-DF3-22S	901-4549-4	DF3-22SCF
	AP105-DF3-EP2428P	901-4508-7	DF3-EP2428PCF/PCFA
Press Unit	CM-105	901-0005-4	————————
Hand Crimping Tool	DF3-TA2428HC	550-0164-5	DF3-2428SC/SCC
	DF3EP-TA2428HC	550-0184-2	DF3-EP2428PC/PCA
	DF3-TA22HC	550-0257-4	DF3-22SC
Extraction Tool	DF-C-PO (A)	550-0170-8	DF3-✱✱✱✱SCF
			DF3-EP✱✱✱✱PCF

Note : If any trouble has occurred due to tools other than designated tool, Hirose bears no respoisibility for any trouble.

The product information in this catalog is for reference only. Please request the Engineering Drawing for the most current and accurate design information.
All non-RoHS products have been discontinued, or will be discontinued soon. Please check the products status on the Hirose website RoHS search at www.hirose-connectors.com, or contact your Hirose sales representative.

◆Embossed Carrier Tape Dimensions

●Straight Pin Header

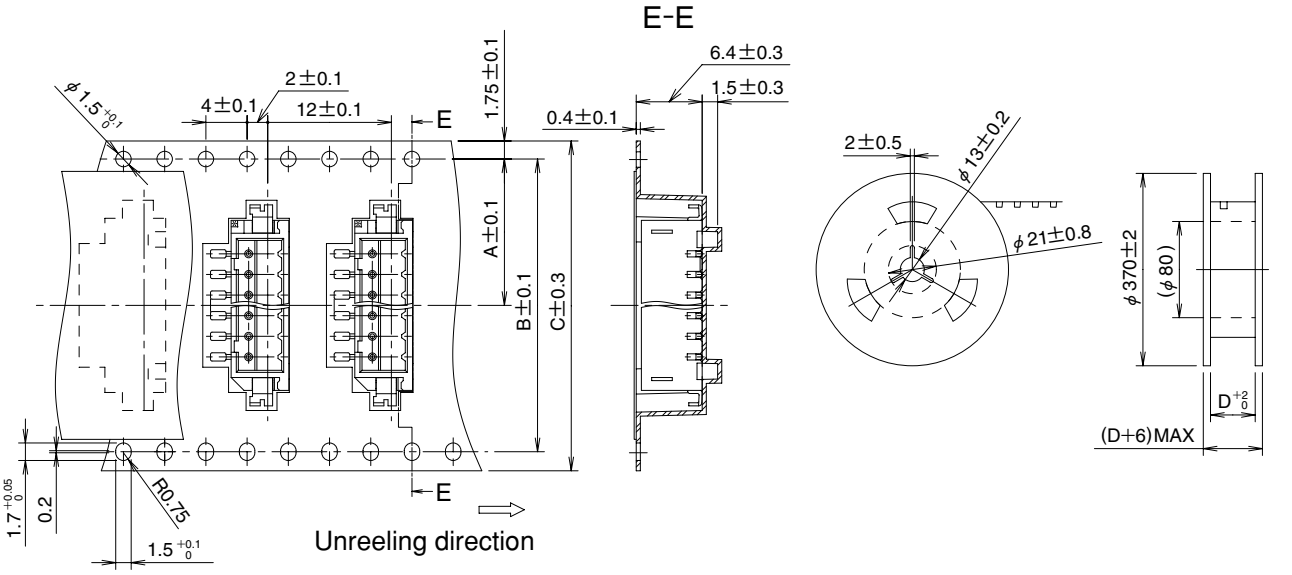

Unit: mm

Product Type / Size	Number of Contacts	A	B	C	D
DF3DZ-*P-2V	2 to 4	24.0	——	11.5	24.4
	5 to 7	32.0	28.4	14.2	32.4
	8 to 10	44.0	40.4	20.2	44.4
	11 to 15	56.0	52.4	26.2	56.4

●Right Angle Pin Header

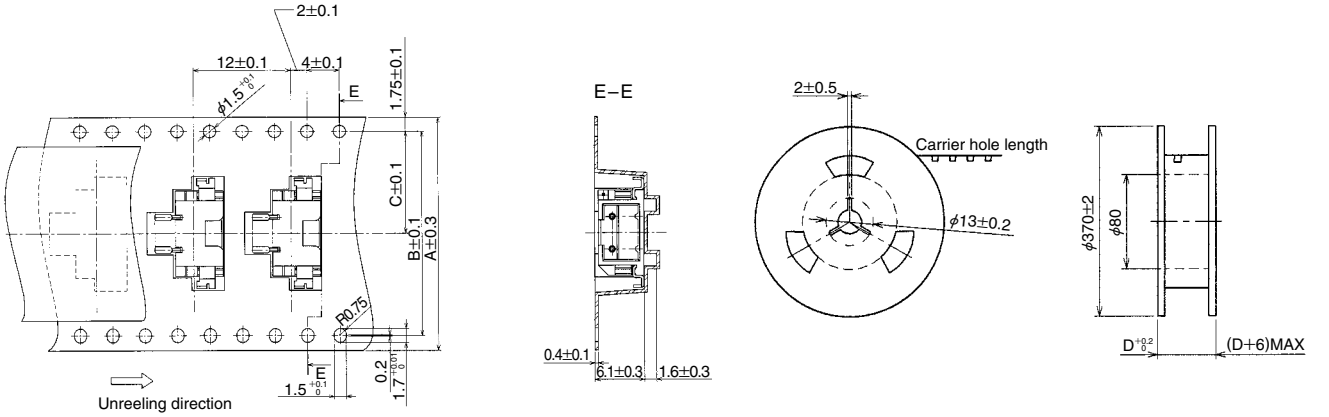

Unit: mm

Product Type / Size	Number of Contacts	A	B	C	D
DF3DZ-*P-2H	2 to 4	24.0	——	11.5	24.4
	5 to 7	32.0	28.4	14.2	32.4
	8 to 10	44.0	40.4	20.2	44.4
	11 to 15	56.0	52.4	26.2	56.4

The product information in this catalog is for reference only. Please request the Engineering Drawing for the most current and accurate design information.
All non-RoHS products have been discontinued, or will be discontinued soon. Please check the products status on the Hirose website RoHS search at www.hirose-connectors.com, or contact your Hirose sales representative.

Precautions

1. Recommended Temperature Profile (SMT)	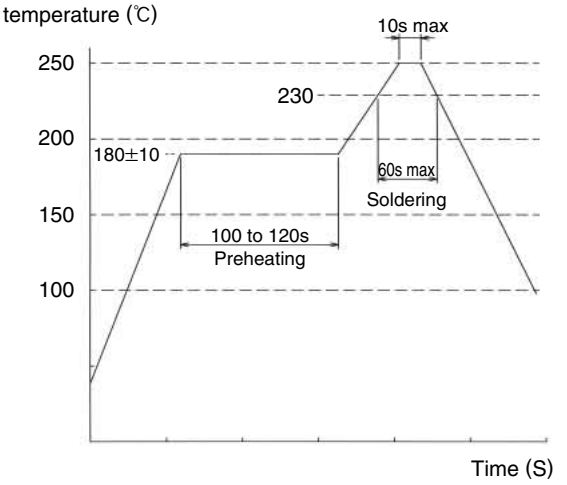 Note1: Up to 2 cycles of Reflow soldering are possible under the same conditions, provided that there is a return to normal temperature between the first and second cycle. Note2: The temperature profile indicates the board surface temperature at the point of cintacts with the connector terminals.
2. Recommended Manual Soldering Condition (SMT)	Soldering iron temperature: 290±10℃, Soldering time: Within 3 seconds
3. Recommended Screen Thickness (SMT)	0.15 to 0.2mm
4. Board Warpage (SMT)	Based on both connector edges, 0.03mm max. in the connector center portion
5. Recommended Soldering Condition (DIP)	■Flow Condition with Automatic Soldering Tool. Soldering temperature: 250±5℃, Soldering time: Within 10 seconds ■Manual Soldering Condition. Soldering iron temperature: 290±10℃, Soldering time: Within 2 seconds
6. Cleaning Condition	Refer to the "Nylon Connector Use Hand book".
7. Connection Condition	Refer to the "Nylon Connector Use Hand book".
8. Precations	Refer to the "Nylon Connector Use Hand book".

Looking for pricing, stock, or lifecycle information?

Click below to explore more details on WIN SOURCE:

- View DF3-5P-2DSA(01) on WIN SOURCE
- Hirose Electric Co Ltd Information

Optimize Your Supply Chain with WIN SOURCE Solutions

- Global Sourcing Solution
- Obsolete Management
- Cost Control Management
- Shortage Management
- Alternative Solution
- Excess Inventory Management