THE DATASHEET OF

DML3006LFDS-7

www.win-source.net 0086-755-83957316

Description

The DIODES™ DML3006LFDS load switch provides a component and area-reducing solution for efficient power domain switching with inrush current limit via soft-start. In addition to integrated control functionality with ultra-low on-resistance, this device offers system safeguards and monitoring via fault protection and power good signaling. This cost effective solution is ideal for power management and hot-swap applications requiring low power consumption in a small footprint.

Applications

- Portable electronics and systems
- Notebooks and tablet computers
- Telecom, networking, medical, and industrial equipment
- Set-top boxes, servers, and gateways
- Hot-swap devices and peripheral ports

Mechanical Data

- Package: V-DFN2020-8
- Package Material: Molded Plastic, "Green" Molding Compound. UL Flammability Classification Rating 94V-0
- Moisture Sensitivity: Level 1 per J-STD-020
- Terminals: Finish — NiPdAu over Copper Leadframe. Solderable per MIL-STD-202, Method 208 e4
- Weight: 0.011 grams (Approximate)

Features and Benefits

- Advanced Controller with Charge Pump
- Integrated N-Channel MOSFET with Ultra-Low R_{ON}
- Input Voltage Range: 0.5V to 13.5V
- Soft-Start via Controlled Slew Rate
- Power Good Signal
- Thermal Shutdown
- V_{IN} Undervoltage Lockout
- Short-Circuit Protection
- Extremely Low Standby Current
- Load Bleed (Quick Discharge)
- **Totally Lead-Free & Fully RoHS Compliant (Notes 1 & 2)**
- **Halogen and Antimony Free. "Green" Device (Note 3)**
- **For automotive applications requiring specific change control (i.e. parts qualified to AEC-Q100/101/104/200, PPAP capable, and manufactured in IATF 16949 certified facilities), please contact us or your local Diodes representative. https://www.diodes.com/quality/product-definitions/**

V-DFN2020-8 (Type F)

Top View

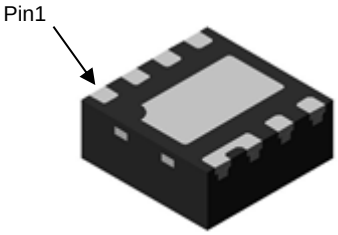

Bottom View

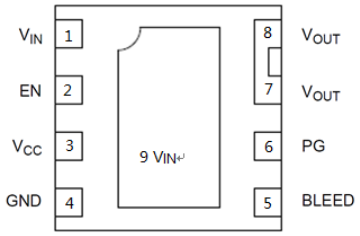

Top View

Ordering Information (Note 4)

Part Number	Package	Packing	
		Qty.	Carrier
DML3006LFDS-7	V-DFN2020-8 (Type F)	3,000	Tape & Reel

Notes:
1. No purposely added lead. Fully EU Directive 2002/95/EC (RoHS), 2011/65/EU (RoHS 2) & 2015/863/EU (RoHS 3) compliant.
2. See https://www.diodes.com/quality/lead-free/ for more information about Diodes Incorporated's definitions of Halogen- and Antimony-free, "Green" and Lead-free.
3. Halogen- and Antimony-free "Green" products are defined as those which contain <900ppm bromine, <900ppm chlorine (<1500ppm total Br + Cl) and <1000ppm antimony compounds.
4. For packaging details, go to our website at https://www.diodes.com/design/support/packaging/diodes-packaging/.

© 2022 Copyright Diodes Incorporated. All Rights Reserved.

Marking Information

Site 1

V-DFN2020-8 (Type F)

LS25P = Product Type Marking Code
YYWW = Date Code Marking
YY = Last Two Digits of Year (ex: 22 = 2022)
WW = Week Code (01 to 53)

Site 2

V-DFN2020-8 (Type F)

LS25P = Product Type Marking Code
YWX = Date Code Marking
Y = Year (ex: 2 = 2022)
W = Week (ex: a = Week 27; z Represents Week 52 and 53)
X = Internal Code (ex: U = Monday)

Date Code Key

Year	2017	….	2022	2023	2024	2025	2026	2027	2028	2029	2030	2031
Code	7	….	2	3	4	5	6	7	8	9	0	1

Week	1-26	27-52	53
Code	A-Z	a-z	z

Internal Code	Sun	Mon	Tue	Wed	Thu	Fri	Sat
Code	T	U	V	W	X	Y	Z

Typical Applications Circuit

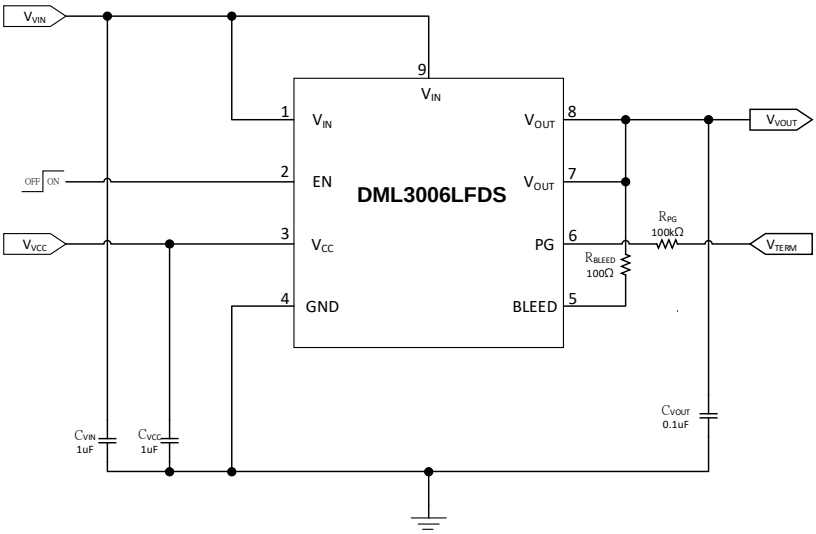

© 2022 Copyright Diodes Incorporated. All Rights Reserved.

Pin Description

Pin Number	Pin Name	Pin Function
1, 9	V_{IN}	Drain of MOSFET (0.5V to 13.5V), Pin 1 must be connected to Pin 9.
2	EN	Active-high digital input used to turn on the MOSFET, pin has an internal pull down resistor to GND.
3	V_{CC}	Supply voltage to controller (3.0V to 5.5V).
4	GND	Controller ground.
5	BLEED	Load bleed connection, must be tied to V_{OUT} through a resistor ≤ 1kΩ.
6	PG	Active-high, open-drain output that indicates when the gate of the MOSFET is fully charged, external pull up resistor ≥ 1kΩ to an external voltage source required; tie to GND if not used.
7, 8	V_{OUT}	Source of MOSFET connected to load.

Function Block Diagram

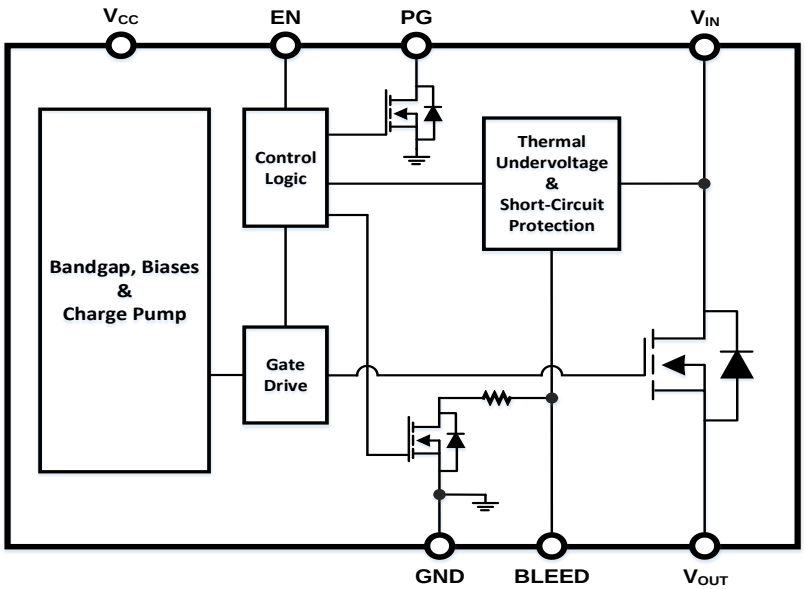

Absolute Maximum Ratings

Parameter	Rating
V_{IN}, BLEED, V_{OUT} to GND	-0.3V to 18V
EN, V_{CC}, PG to GND	-0.3V to 6V
I_{MAX_DC} (Note 5)	11A
Junction Temperature (T_J)	+150°C
Storage Temperature (T_S)	-65°C to +150°C

Note: 5. I_{MAX_DC} is defined as the maximum steady state current the load switch can pass at room ambient temperature without entering thermal lockout.

Recommended Operating Ranges

Parameter	Rating
Supply Voltage (V_{VCC})	3V to 5.5V
Input Voltage (V_{VIN})	0.5V to 13.5V
Ambient Temperature (T_A)	-40°C to +85°C
Package Thermal Resistance (θ_{JC})	5.3°C/W
Package Thermal Resistance (θ_{JA})	40°C/W

© 2022 Copyright Diodes Incorporated. All Rights Reserved.

Electrical Characteristics (T_A = +25°C, V_{VCC} = 3.3V, V_{VIN} = 5V = V_{TERM}, C_{VIN} = 1µF, C_{VOUT} = 0.1µF, C_{VCC} = 1µF, C_{SR} = 1nF, unless otherwise specified.)

Symbol	Parameter	Conditions	Min	Typ	Max	Unit
V_{VIN}	Input Voltage	—	0.5	—	13.5	V
V_{VCC}	Supply Voltage	—	3.0	—	5.5	V
I_{DYN}	V_{CC} Dynamic Supply Current	V_{EN} = V_{VCC} = 3V, V_{VIN} = 12V	—	310	400	µA
		V_{EN} = V_{VCC} = 5.5V, V_{VIN}= 1.8V	—	510	750	µA
I_{STBY}	V_{CC} Shutdown Supply Current	V_{VCC} = 3V, V_{EN} = 0V	—	0.1	1	µA
		V_{VCC} = 5.5V, V_{EN} = 0V	—	0.1	2	µA
V_{ENH}	EN High Level Voltage	V_{VCC} = 3V to 5.5V	2.0	—	—	V
V_{ENL}	EN Low Level Voltage	V_{VCC} = 3V to 5.5V	—	—	0.8	V
R_{BLEED}	Bleed Resistance	V_{VCC} = 3V, V_{EN} = 0V	86	108	130	Ω
		V_{VCC} = 5.5V, V_{EN} = 0V	64	80	100	Ω
I_{BLEED}	Bleed Pin Leakage Current	V_{VCC} = V_{EN} = 3V, V_{VIN} = 1.8V	—	20	—	µA
		V_{VCC} = V_{EN} = 3V, V_{VIN} = 12V	—	50	—	µA
V_{PGL}	PG Output Low Voltage	V_{VCC} = 3V, I_{SINK} = 5mA	—	—	0.2	V
I_{PG}	PG Output Leakage Current	V_{VCC} = 3V, V_{TERM} = 3.3V	—	—	100	nA
Switching Device						
R_{ON}	Switch On-State Resistance	V_{VCC} = 3.3V, V_{VIN} = 1.8V	—	10.8	12.5	mΩ
		V_{VCC} = 3.3V, V_{VIN} = 5V	—	10.8	12.5	mΩ
		V_{VCC} = 3.3V, V_{VIN} = 12V	—	10.8	12.5	mΩ
		V_{VCC} = 5V, V_{VIN} = 1.8V	—	8.6	10.5	mΩ
		V_{VCC} = 5V, V_{VIN} = 5V	—	8.6	10.5	mΩ
		V_{VCC} = 5V, V_{VIN} = 12V	—	8.6	10.5	mΩ
I_{LEAK}	Input Shutdown Supply Current	V_{EN} = 0V, V_{VIN} = 13.5V	—	—	1	µA
R_{PDEN}	EN Pull Down Resistance	—	76	100	124	kΩ
Fault Protection						
OTP	Thermal Shutdown Threshold	V_{VCC} = 3V to 5.5V	—	+145	—	°C
OTP_{HYS}	Thermal Shutdown Hysteresis	V_{VCC} = 3V to 5.5V	—	+20	—	°C
UVLO	V_{IN} Lockout Threshold	V_{VCC} = 3V	0.25	0.35	0.45	V
$UVLO_{HYS}$	V_{IN} Lockout Hysteresis	V_{VCC} = 3V	20	40	70	mV
SCP	Short-Circuit Protection Threshold	V_{VCC} = 3.3V, V_{VIN} = 0.5V	180	265	350	mV
		V_{VCC} = 3.3V, V_{VIN} = 13.5V	100	285	500	mV

© 2022 Copyright Diodes Incorporated. All Rights Reserved.

Switching Characteristics (T_A = +25°C, V_{TERM} = V_{VCC} = 5V, R_{PG} = 100kΩ, R_{VOUT} = 10Ω, C_{VIN} = 1μF, C_{VOUT} = 0.1μF, C_{VCC} = 1μF, unless otherwise specified.)

Symbol	Parameter	Condition	Min	Typ	Max	Unit
V_{VIN} = 1.8V						
t_{ON}	Output Turn-On Delay Time	V_{VCC} = 3.3V	—	200	—	μs
		V_{VCC} = 5V	—	190	—	
t_{OFF}	Output Turn-Off Delay Time	V_{VCC} = 3.3V	—	0.4	—	
		V_{VCC} = 5V	—	0.4	—	
t_{PGON}	Power Good Turn-On Time	V_{VCC} = 3.3V	—	1.25	—	ms
		V_{VCC} = 5V	—	1.05	—	
t_{PGOFF}	Power Good Turn-Off Time	V_{VCC} = 3.3V	—	10	—	ns
		V_{VCC} = 5V	—	8	—	
SR	Output Slew Rate	V_{VCC} = 3.3V	—	23	—	kV/s
		V_{VCC} = 5V	—	24	—	
V_{VIN} = 12V						
t_{ON}	Output Turn-On Delay Time	V_{VCC} = 3.3V	—	190	—	μs
		V_{VCC} = 5V	—	180	—	
t_{OFF}	Output Turn-Off Delay Time	V_{VCC} = 3.3V	—	0.4	—	
		V_{VCC} = 5V	—	0.4	—	
t_{PGON}	Power Good Turn-On Time	V_{VCC} = 3.3V	—	1.3	—	ms
		V_{VCC} = 5V	—	1.25	—	
t_{PGOFF}	Power Good Turn-Off Time	V_{VCC} = 3.3V	—	10	—	ns
		V_{VCC} = 5V	—	8	—	
SR	Output Slew Rate	V_{VCC} = 3.3V	—	80	—	kV/s
		V_{VCC} = 5V	—	81	—	

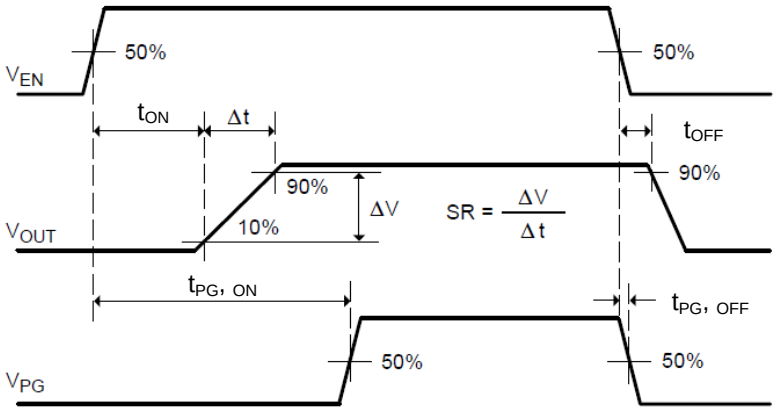

Figure 1 Timing Diagram

© 2022 Copyright Diodes Incorporated. All Rights Reserved.

Performance Characteristics (@ T_A = +25°C, unless otherwise specified.)

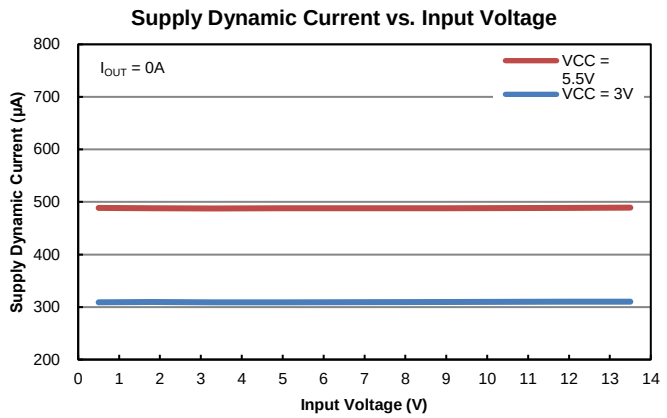

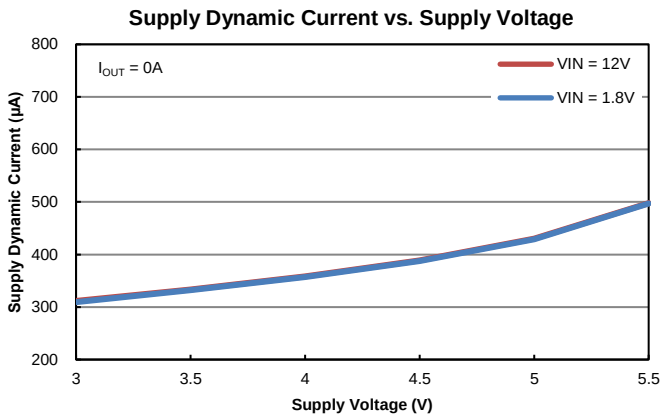

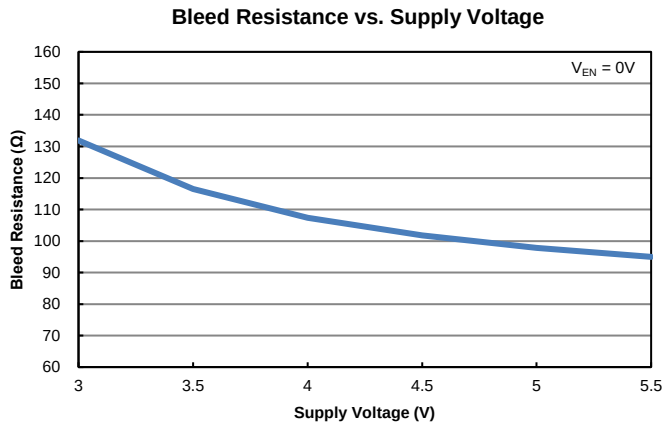

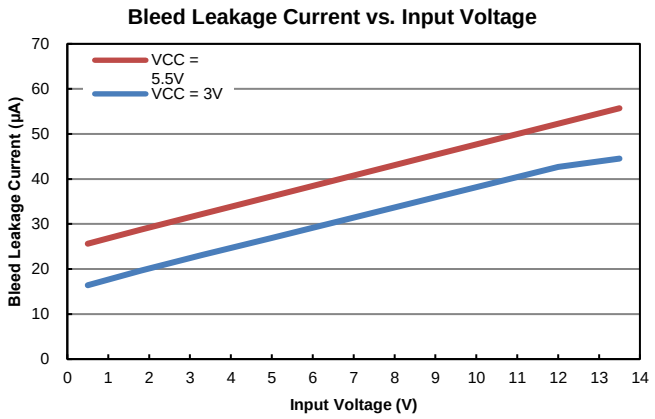

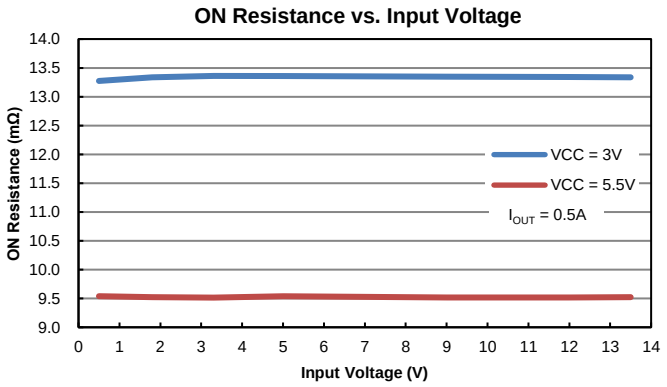

© 2022 Copyright Diodes Incorporated. All Rights Reserved.

Performance Characteristics (@ T_A = +25°C, unless otherwise specified.) (continued)

Turn ON Response

V_{VIN} = 1.8V, V_{VCC} = 3.3V, V_{EN} = 0V to 3.3V, R_L = 10Ω

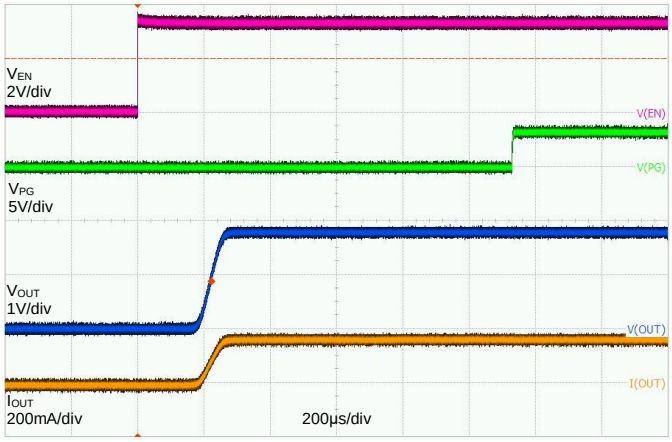

Turn OFF Response

V_{VIN} = 1.8V, V_{VCC} = 3.3V, V_{EN} = 3.3V to 0V, R_L = 10Ω

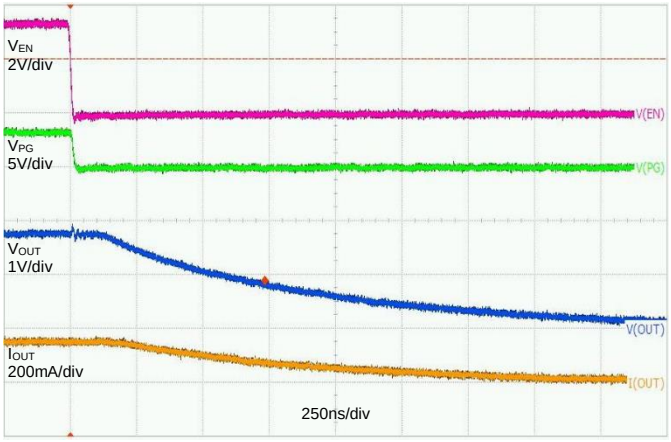

Turn ON Response

V_{VIN} = 5.0V, V_{VCC} = 3.3V, V_{EN} = 0V to 3.3V, R_L = 10Ω

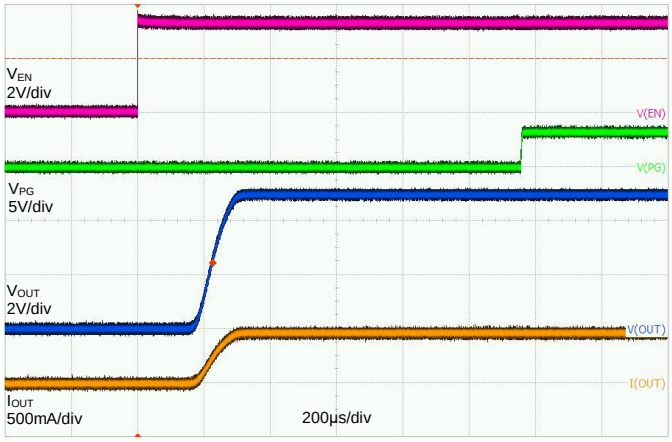

Turn OFF Response

V_{VIN} = 5.0V, V_{VCC} = 3.3V, V_{EN} = 3.3V to 0V, R_L = 10Ω

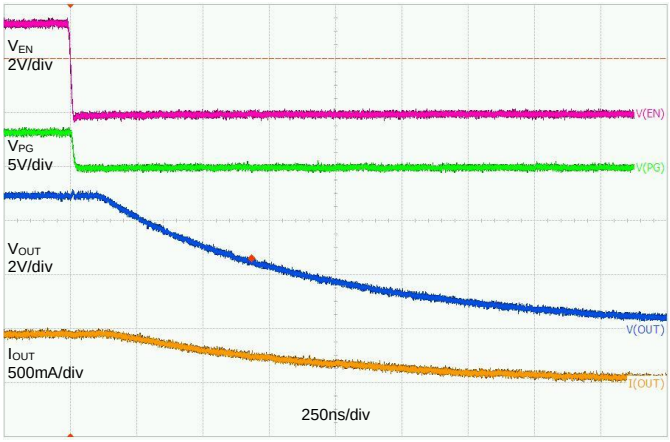

Turn ON Response

V_{VIN} = 12V, V_{VCC} = 3.3V, V_{EN} = 0V to 3.3V, R_L = 10Ω

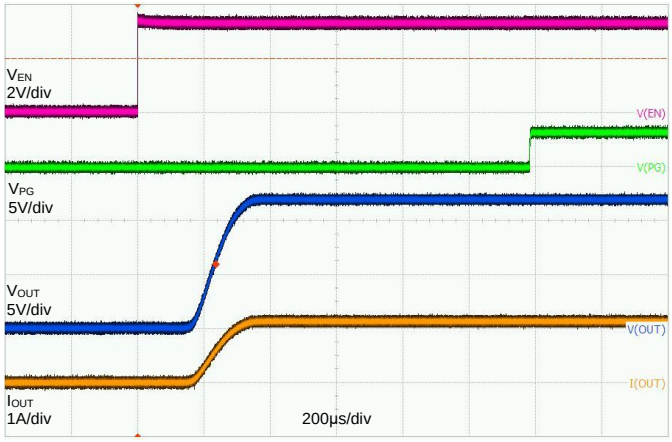

Turn OFF Response

V_{VIN} = 12V, V_{VCC} = 3.3V, V_{EN} = 3.3V to 0V, R_L = 10Ω

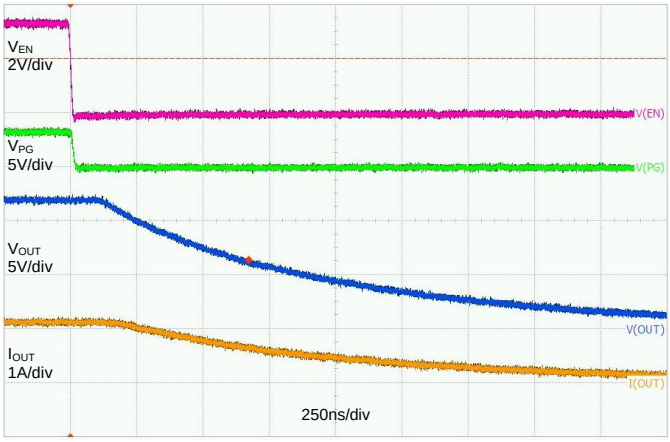

© 2022 Copyright Diodes Incorporated. All Rights Reserved.

Performance Characteristics (@ T_A = +25°C, unless otherwise specified.) (continued)

Turn ON Response

V_{VIN} = 1.8V, V_{VCC} = 5.0V, V_{EN} = 0V to 3.3V, R_L = 10Ω

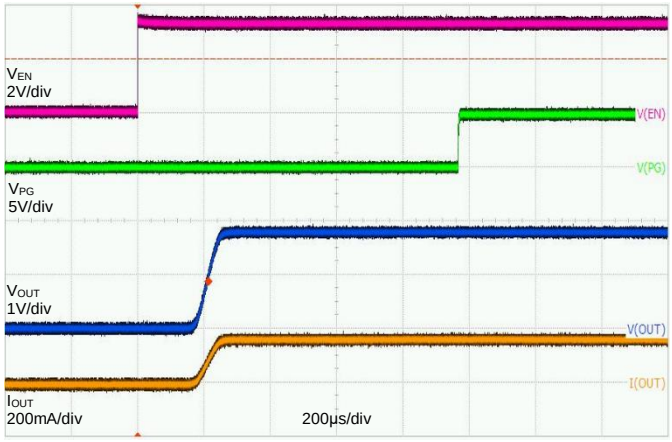

Turn OFF Response

V_{VIN} = 1.8V, V_{VCC} = 5.0V, V_{EN} = 3.3V to 0V, R_L = 10Ω

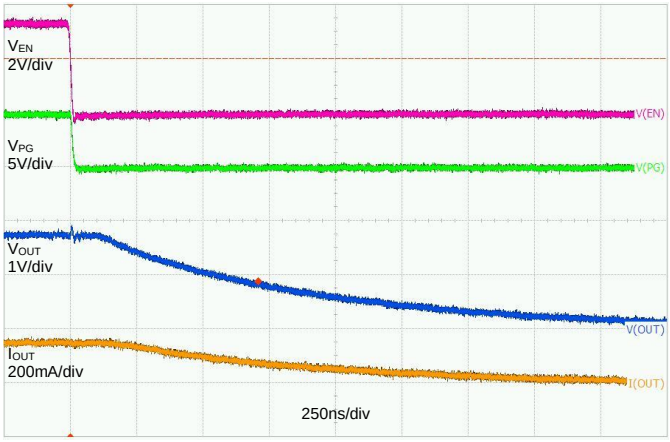

Turn ON Response

V_{VIN} = 5.0V, V_{VCC} = 5.0V, V_{EN} = 0V to 3.3V, R_L = 10Ω

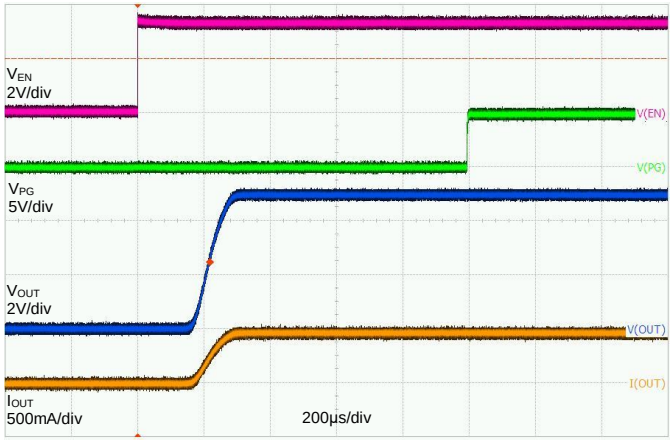

Turn OFF Response

V_{VIN} = 5.0V, V_{VCC} = 5.0V, V_{EN} = 3.3V to 0V, R_L = 10Ω

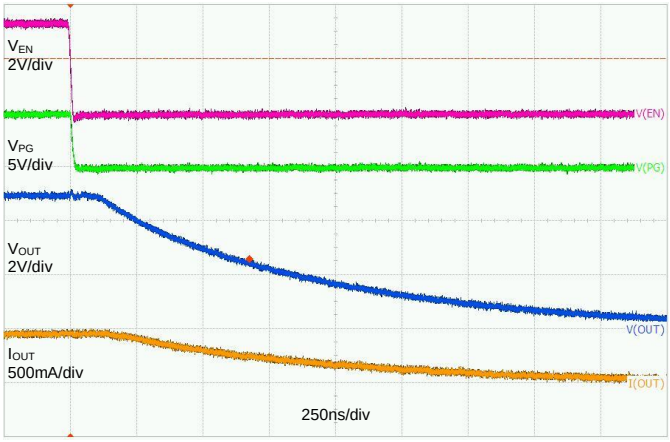

Turn ON Response

V_{VIN} = 12V, V_{VCC} = 5.0V, V_{EN} = 0V to 3.3V, R_L = 10Ω

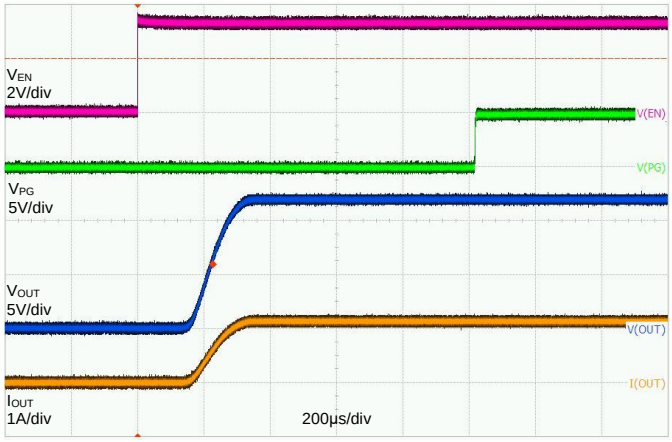

Turn OFF Response

V_{VIN} = 12V, V_{VCC} = 5.0V, V_{EN} = 3.3V to 0V, R_L = 10Ω

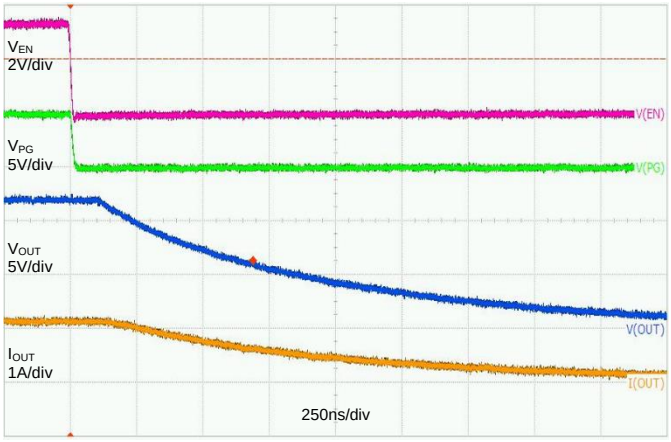

© 2022 Copyright Diodes Incorporated. All Rights Reserved.

Application Information

General Description

The DML3006LFDS is a single channel load switch with a controlled adjustable turn-on and integrated PG indicator in an 8-pin V-DFN2020-8 (Type F) package. The device contains an N-channel MOSFET that can operate over an input voltage range of 0.5V to 13.5V and can support a maximum continuous current of 11A. The wide input voltage range and high current capability enable the device to be used across multiple designs and end equipment. 9mΩ on-resistance minimizes the voltage drop across the load switch and power loss from the load switch.

The controlled rise time for the device greatly reduces inrush current by large bulk load capacitances, thereby reducing or eliminating power supply droop. The adjustable slew rate through SR provides the design flexibility to trade off the inrush current and power up timing requirements. Integrated PG indicator notifies the system about the status of the load switch to facilitate seamless power sequencing. During shutdown, the device has very low leakage current, thereby reducing unnecessary leakages for downstream modules during standby. A 100Ω on-chip resistor is also embedded on the BLEED pin of DML3006LFDS for quick discharge of the output when switch is disabled.

Enable Control

The DML3006LFDS device allows for enabling the MOSFET in an active-high configuration. When the V_{CC} supply pin has an adequate voltage applied and the EN pin is at logic high level, the MOSFET is enabled. Similarly, when the EN pin is at logic low level, the MOSFET is disabled. An internal pull down resistor to ground on the EN pin ensures that the MOSFET is disabled when not being driven.

Power Sequencing

The DML3006LFDS functions with power sequence, the performance of output turn-on delay may vary from what is specified. To achieve the specified performance that we recommended power sequence is:

1. $V_{VCC} \rightarrow V_{VIN} \rightarrow V_{EN}$
2. $V_{VCC} = V_{VIN} \rightarrow V_{EN}$

Load Bleed (Quick Discharge)

The DML3006LFDS has an internal bleed discharge device, which is used to bleed the charge off from the load to ground after the MOSFET was disabled. The bleed discharge device is enabled whenever the MOSFET is disabled. The MOSFET and the bleed device are never concurrently active.

The BLEED pin must connect to V_{OUT} either directly or through an external resistor, R_{EXT}. The R_{EXT} must not exceed 1kΩ and can be used to increase the total bleed resistance.

Care must be taken to ensure that the power dissipated across R_{BLEED} kept at safe level. The maximum continuous power that can be dissipates across R_{BLEED} is 0.4W. R_{EXT} can be used to decrease the amount of power dissipated across R_{BLEED}.

Power Good

The DML3006LFDS device has a power good output (PG) that can be used to indicate when the gate of the MOSFET is driven high and the switch is on with the on-resistance close to its final value (at the full load condition). The PG pin is an active-high, open-drain output that requires an external pull up resistor, R_{PG}, greater than or equal to 1kΩ to an external voltage source, V_{TERM}, compatible with input levels of those devices connected to this pin.

The power good output can be used as the enabling signal for other active-high devices in the system. This allows for guaranteed by design power sequencing and reduces the number of enabling signals needed from the system controller. If the power good feature is not used in the application, the PG pin must be tied to GND.

Short Circuit Protection

The DML3006LFDS is equipped with short-circuit protection that is used to help protect the part and the system from a sudden high-current event, such as the output, V_{OUT}, being shorted to ground. This circuitry is only active when the gate of MOSFET is fully charged.

Once active, the circuitry monitors the difference in the voltage on the V_{IN} pin and the voltage on the BLEED pin. In order for the V_{OUT} voltage to be monitored through the BLEED pin, it is required that BLEED pin be connected to V_{OUT} either directly or through a resistor, R_{EXT}, which should not exceed 1kΩ. Once the BLEED pin is connected to V_{OUT}, the short-circuit protection will be activated to monitor the voltage drop across the MOSFET.

If the voltage drop across the MOSFET is greater than or equal to the short-circuit protection threshold voltage, the MOSFET is immediately turned off and the load bleed is activated. The part remains latched in this off state until EN is toggled or V_{CC} supply voltage is cycled, at which point the MOSFET will be turn-on delay and slew rate. The current through the MOSFET that will cause a short-circuit event can be calculated by dividing the short-circuit protection threshold by expected on-resistance of the MOSFET.

© 2022 Copyright Diodes Incorporated. All Rights Reserved.

Application Information (continued)

Thermal Shutdown

The DML3006LFDS is equipped with thermal shutdown protection for internally or externally generated excessive temperatures. This circuitry is disabled when EN is not active to reduce standby current. When an overtemperature condition is detected, the MOSFET is immediately turned off and the load bleed is active.

The part comes out of thermal shutdown when the junction temperature decreases to a safe operating temperature, as dictated by the thermal hysteresis. Upon exiting a thermal shutdown state and if EN remains active, the MOSFET will be turned on in a controlled fashion with the normal output turn-on delay and slew rate.

Undervoltage Lockout

The DML3006LFDS is also equipped with undervoltage lockout protection. The DML3006LFDS turns the MOSFET off and activates the load bleed when the input voltage, V_{IN}, is less than or equal to the undervoltage lockout threshold. This circuitry is disabled when EN is not active to reduce standby current.

If the V_{IN} voltage rises above the undervoltage lockout threshold and EN remains active, the MOSFET will be turned on in a controlled fashion with the normal output turn-on delay and slew rate.

PCB Layout Consideration

1. Place the input/output capacitors C_{VIN} and C_{VOUT} as close as possible to the V_{IN} and V_{OUT} pins.
2. The power traces which are V_{IN} trace, V_{OUT} trace and GND trace should be short, wide and direct for minimizing parasitic inductance.
3. Place feedback resistance R_{BLEED} as close as possible to BLEED pin.
4. Place C_{VCC} capacitor near the device pin.
5. Connect the signal ground to the GND pin, and keep a single connection from GND pin to the power ground behind the input or output capacitors.
6. For better power dissipation, via holes are recommended to connect the exposed pad's landing area to a large copper polygon on the other side of the printed circuit board. The copper polygons and exposed pad shall connect to V_{IN} pin on the printed circuit board.

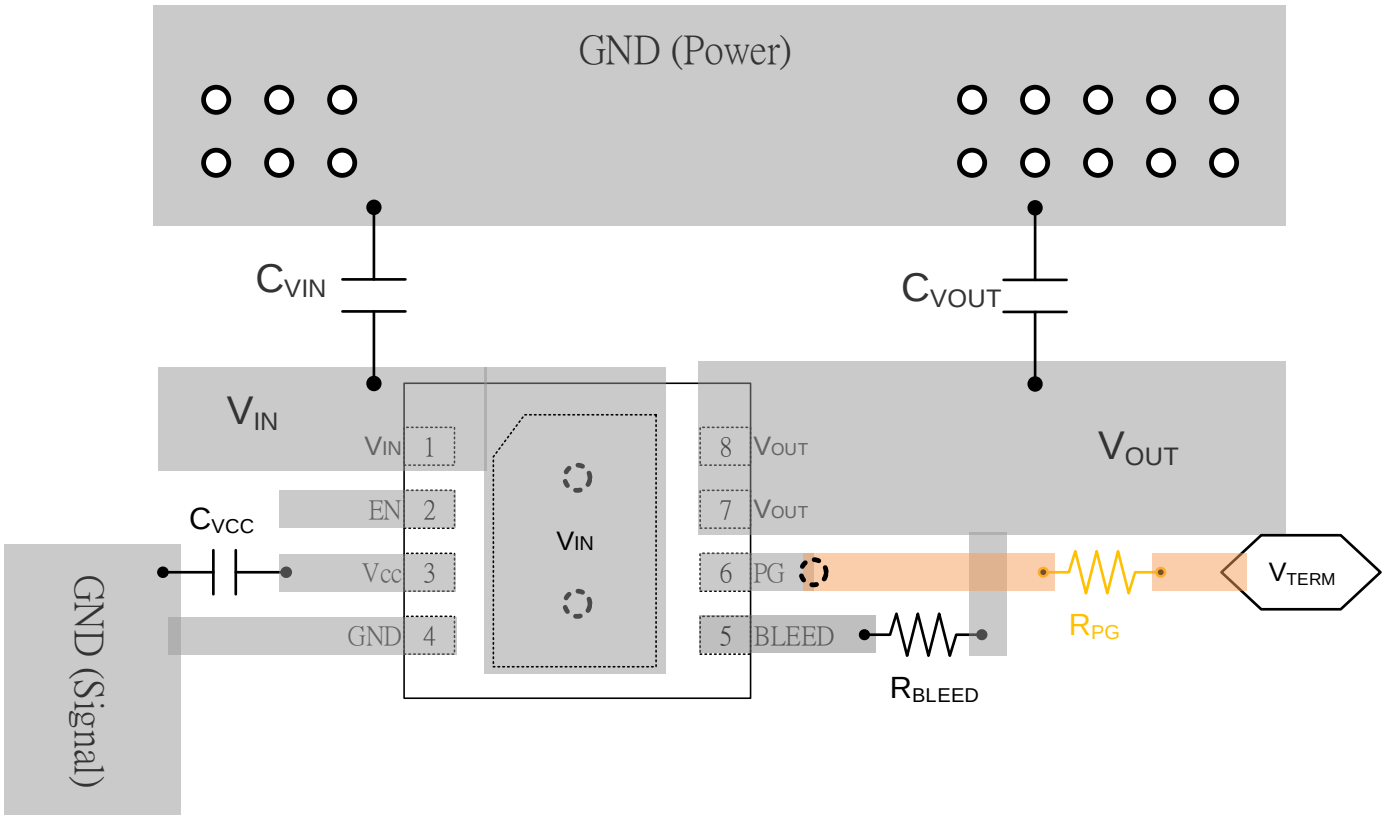

© 2022 Copyright Diodes Incorporated. All Rights Reserved.

Package Outline Dimensions

Please see http://www.diodes.com/package-outlines.html for the latest version.

V-DFN2020-8 (Type F)

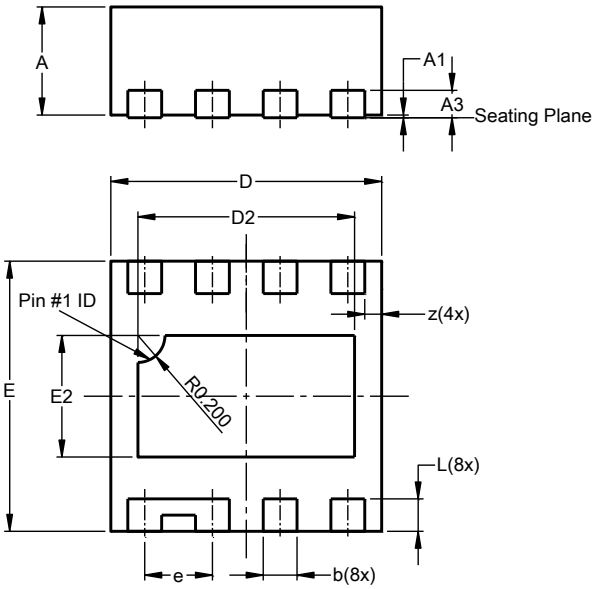

V-DFN2020-8 (Type F)			
Dim	**Min**	**Max**	**Typ**
A	0.77	0.85	0.80
A1	0.00	0.05	0.02
A3	--	--	0.203
b	0.20	0.30	0.25
D	1.95	2.05	2.00
D2	1.50	1.70	1.60
E	1.95	2.05	2.00
E2	0.80	1.00	0.90
e	--	--	0.50
L	0.19	0.29	0.24
z	--	--	0.125
All Dimensions in mm			

Suggested Pad Layout

Please see http://www.diodes.com/package-outlines.html for the latest version.

V-DFN2020-8 (Type F)

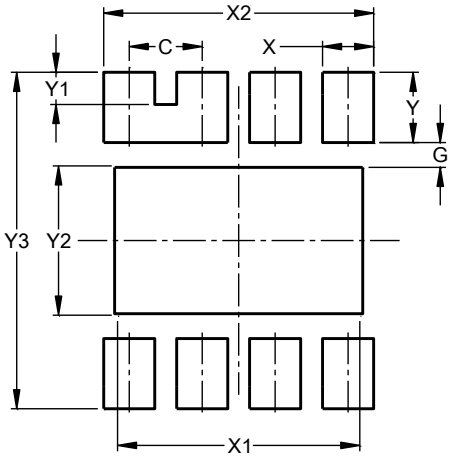

Dimensions	Value (in mm)
C	0.500
G	0.170
X	0.350
X1	1.660
X2	1.850
Y	0.480
Y1	0.220
Y2	1.020
Y3	2.300

© 2022 Copyright Diodes Incorporated. All Rights Reserved.

IMPORTANT NOTICE

1. DIODES INCORPORATED (Diodes) AND ITS SUBSIDIARIES MAKE NO WARRANTY OF ANY KIND, EXPRESS OR IMPLIED, WITH REGARDS TO ANY INFORMATION CONTAINED IN THIS DOCUMENT, INCLUDING, BUT NOT LIMITED TO, THE IMPLIED WARRANTIES OF MERCHANTABILITY, FITNESS FOR A PARTICULAR PURPOSE OR NON-INFRINGEMENT OF THIRD PARTY INTELLECTUAL PROPERTY RIGHTS (AND THEIR EQUIVALENTS UNDER THE LAWS OF ANY JURISDICTION).

2. The Information contained herein is for informational purpose only and is provided only to illustrate the operation of Diodes' products described herein and application examples. Diodes does not assume any liability arising out of the application or use of this document or any product described herein. This document is intended for skilled and technically trained engineering customers and users who design with Diodes' products. Diodes' products may be used to facilitate safety-related applications; however, in all instances customers and users are responsible for (a) selecting the appropriate Diodes products for their applications, (b) evaluating the suitability of Diodes' products for their intended applications, (c) ensuring their applications, which incorporate Diodes' products, comply the applicable legal and regulatory requirements as well as safety and functional-safety related standards, and (d) ensuring they design with appropriate safeguards (including testing, validation, quality control techniques, redundancy, malfunction prevention, and appropriate treatment for aging degradation) to minimize the risks associated with their applications.

3. Diodes assumes no liability for any application-related information, support, assistance or feedback that may be provided by Diodes from time to time. Any customer or user of this document or products described herein will assume all risks and liabilities associated with such use, and will hold Diodes and all companies whose products are represented herein or on Diodes' websites, harmless against all damages and liabilities.

4. Products described herein may be covered by one or more United States, international or foreign patents and pending patent applications. Product names and markings noted herein may also be covered by one or more United States, international or foreign trademarks and trademark applications. Diodes does not convey any license under any of its intellectual property rights or the rights of any third parties (including third parties whose products and services may be described in this document or on Diodes' website) under this document.

5. Diodes' products are provided subject to Diodes' Standard Terms and Conditions of Sale (https://www.diodes.com/about/company/terms-and-conditions/terms-and-conditions-of-sales/) or other applicable terms. This document does not alter or expand the applicable warranties provided by Diodes. Diodes does not warrant or accept any liability whatsoever in respect of any products purchased through unauthorized sales channel.

6. Diodes' products and technology may not be used for or incorporated into any products or systems whose manufacture, use or sale is prohibited under any applicable laws and regulations. Should customers or users use Diodes' products in contravention of any applicable laws or regulations, or for any unintended or unauthorized application, customers and users will (a) be solely responsible for any damages, losses or penalties arising in connection therewith or as a result thereof, and (b) indemnify and hold Diodes and its representatives and agents harmless against any and all claims, damages, expenses, and attorney fees arising out of, directly or indirectly, any claim relating to any noncompliance with the applicable laws and regulations, as well as any unintended or unauthorized application.

7. While efforts have been made to ensure the information contained in this document is accurate, complete and current, it may contain technical inaccuracies, omissions and typographical errors. Diodes does not warrant that information contained in this document is error-free and Diodes is under no obligation to update or otherwise correct this information. Notwithstanding the foregoing, Diodes reserves the right to make modifications, enhancements, improvements, corrections or other changes without further notice to this document and any product described herein. This document is written in English but may be translated into multiple languages for reference. Only the English version of this document is the final and determinative format released by Diodes.

8. Any unauthorized copying, modification, distribution, transmission, display or other use of this document (or any portion hereof) is prohibited. Diodes assumes no responsibility for any losses incurred by the customers or users or any third parties arising from any such unauthorized use.

9. This Notice may be periodically updated with the most recent version available at https://www.diodes.com/about/company/terms-and-conditions/important-notice

The Diodes logo is a registered trademark of Diodes Incorporated in the United States and other countries.
DIODES is a trademark of Diodes Incorporated in the United States and other countries.
All other trademarks are the property of their respective owners.
© 2022 Diodes Incorporated. All Rights Reserved.

www.diodes.com

© 2022 Copyright Diodes Incorporated. All Rights Reserved.

Looking for pricing, stock, or lifecycle information?

Click below to explore more details on WIN SOURCE:

- View DML3006LFDS-7 on WIN SOURCE
- Diodes Incorporated Information

Optimize Your Supply Chain with WIN SOURCE Solutions

- Global Sourcing Solution
- Obsolete Management
- Cost Control Management
- Shortage Management
- Alternative Solution
- Excess Inventory Management